Regenboog v3

Model instructions by Maico Arts

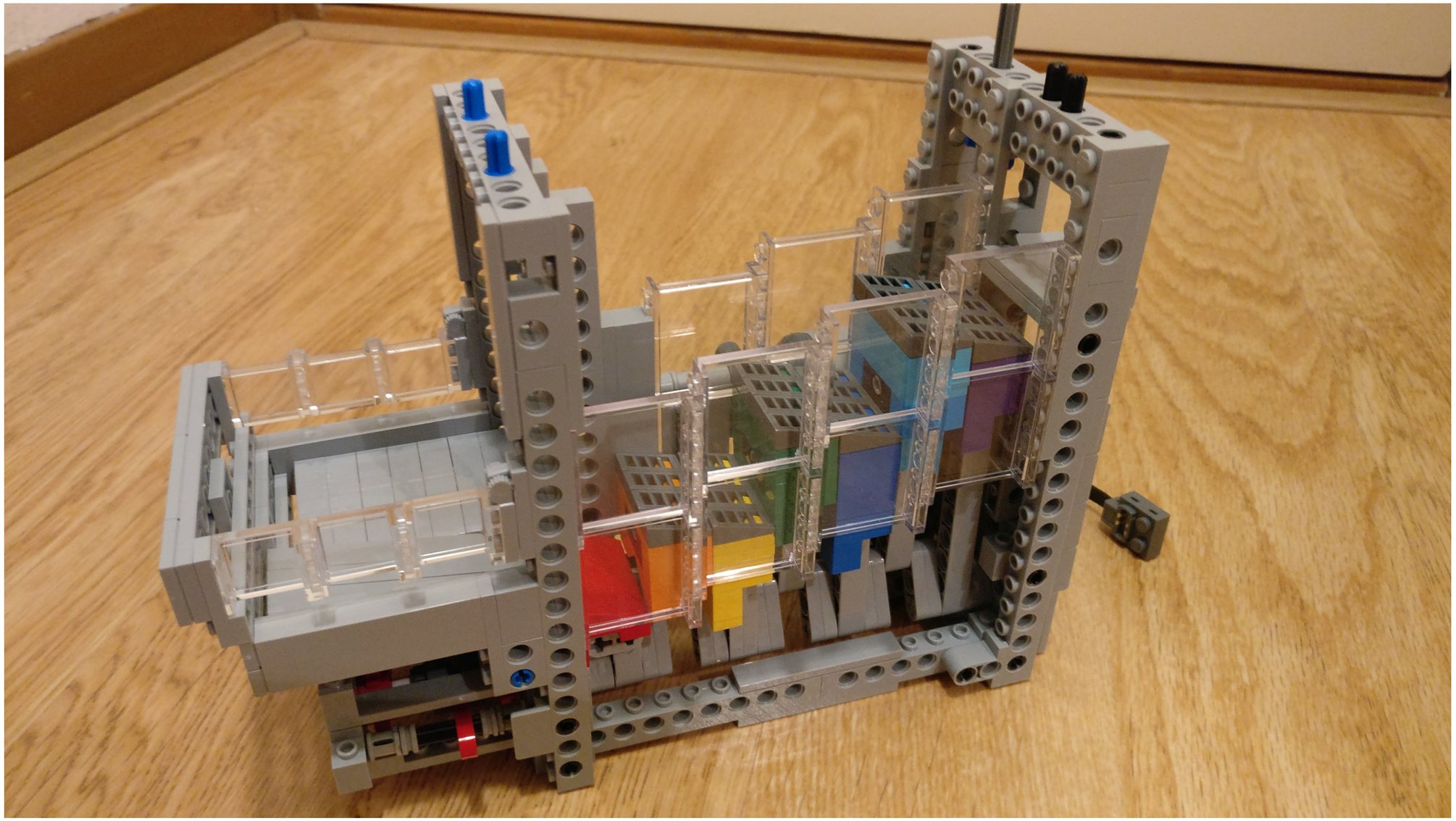

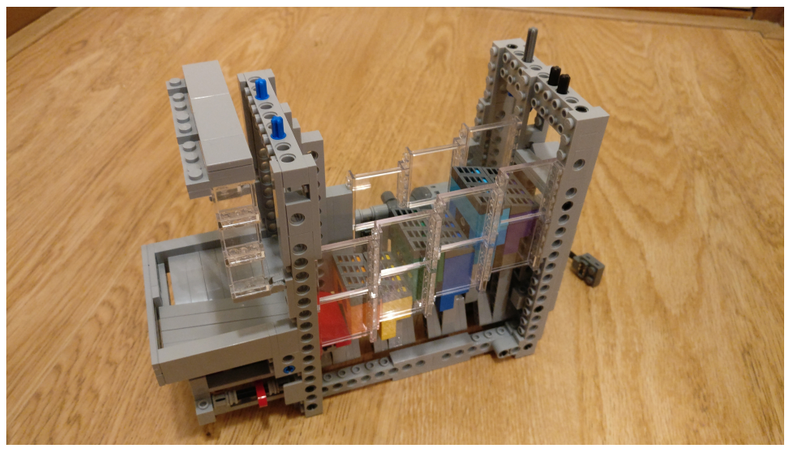

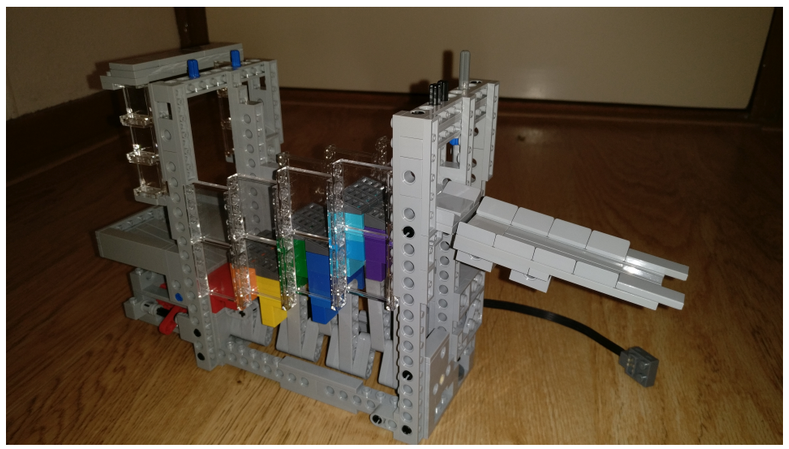

413 Pieces

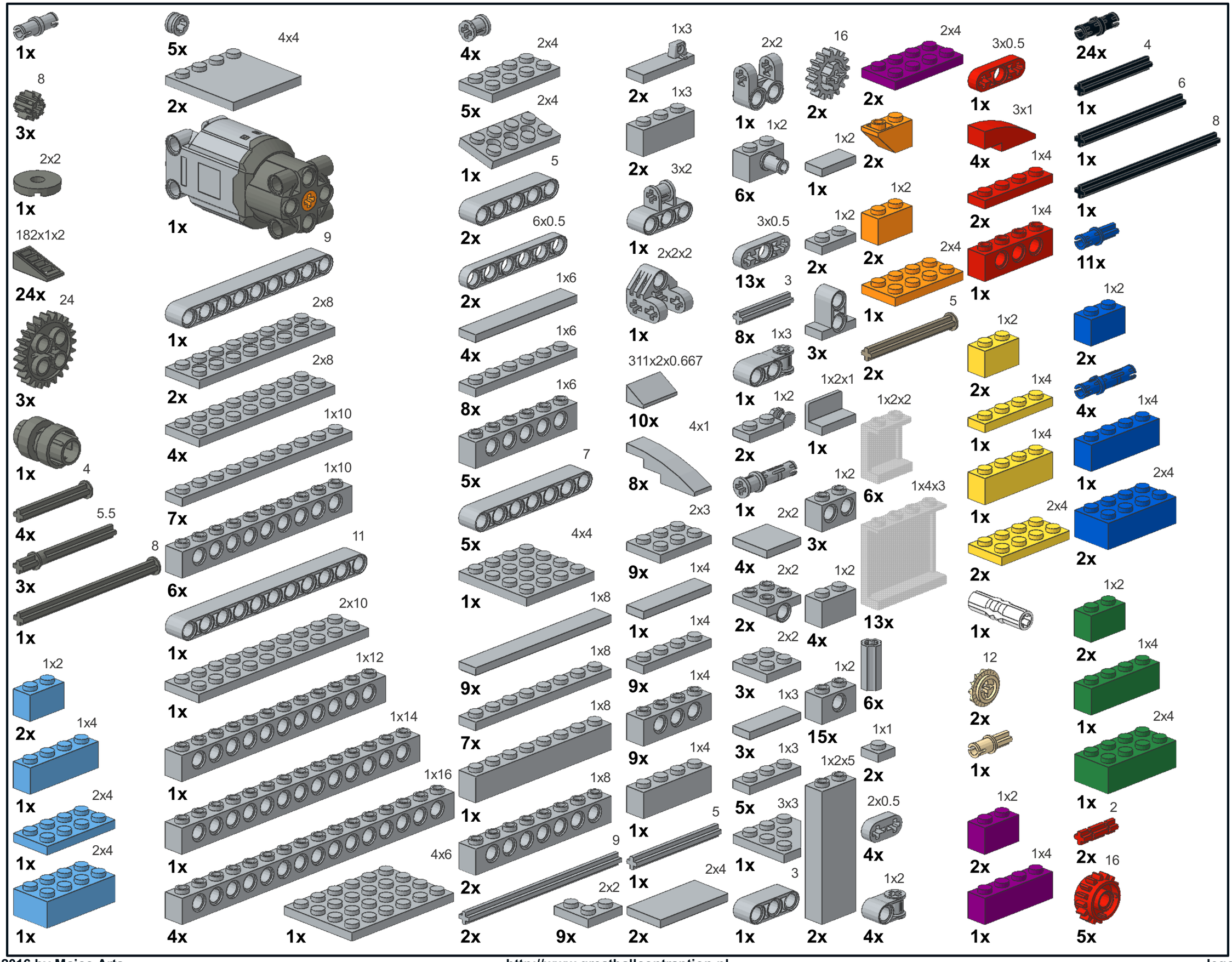

Copyright © 2016 by Maico Arts

1

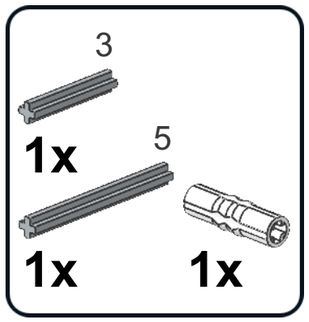

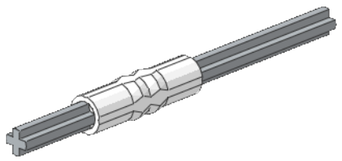

2

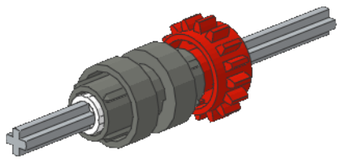

3

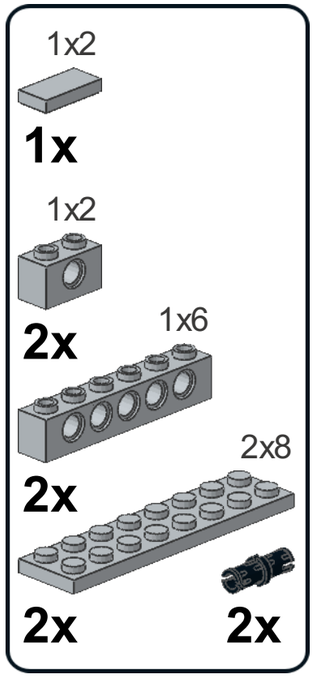

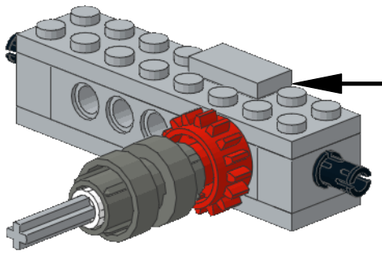

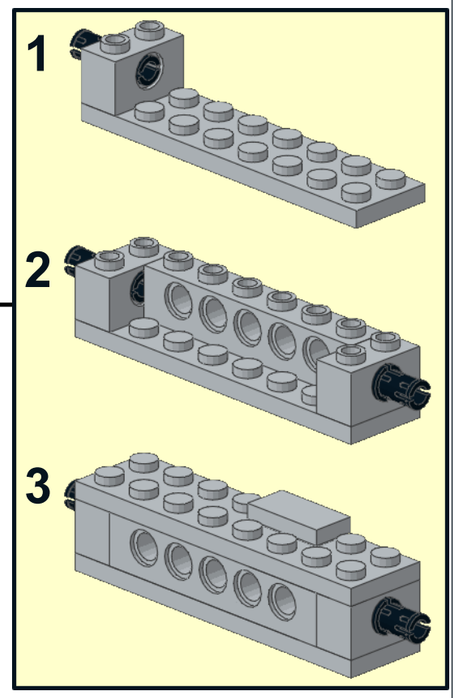

4

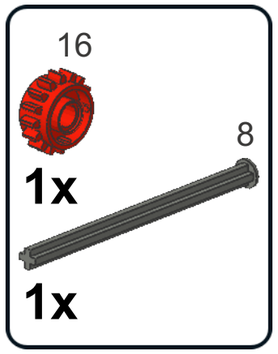

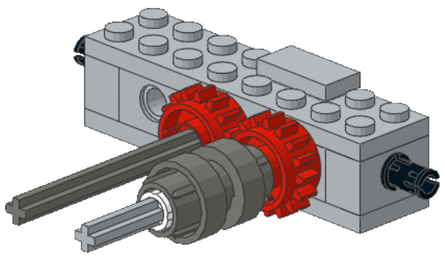

5

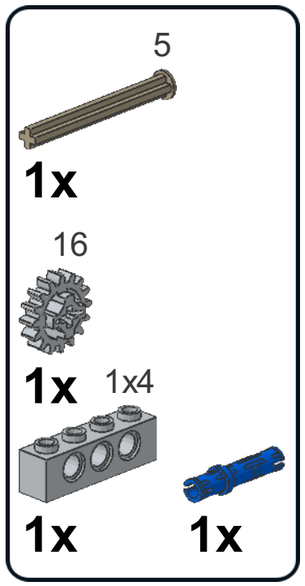

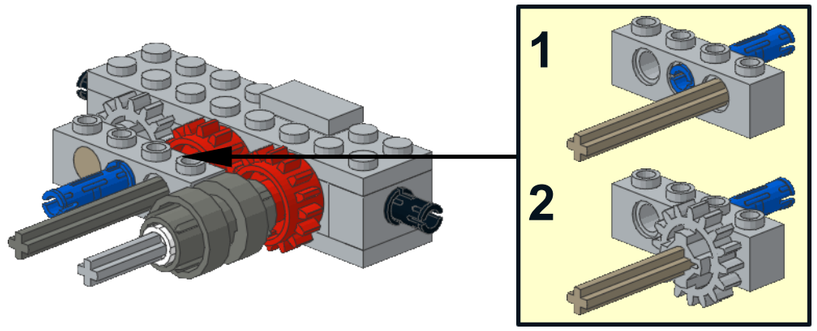

6

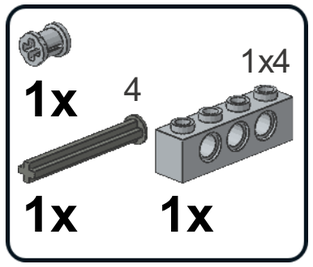

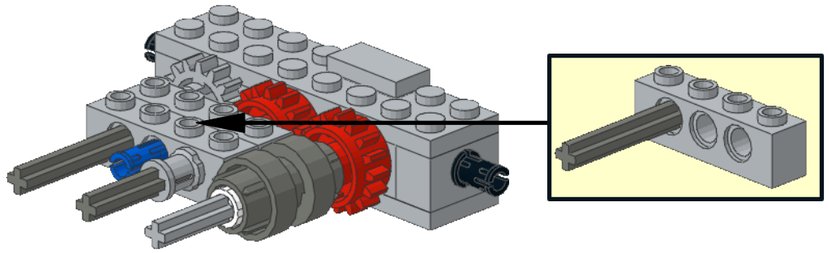

7

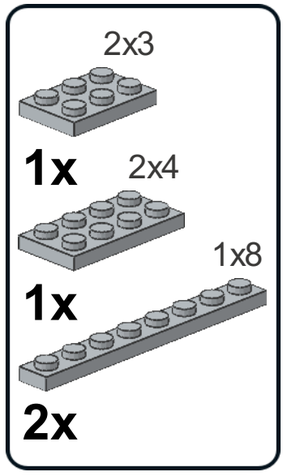

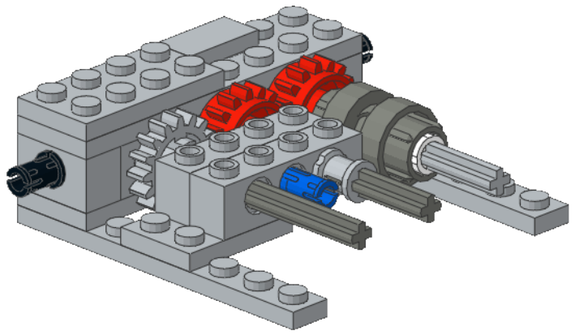

8

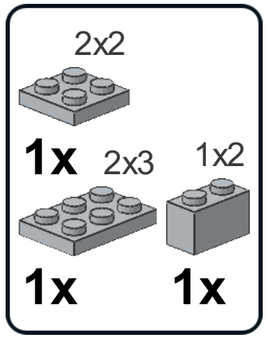

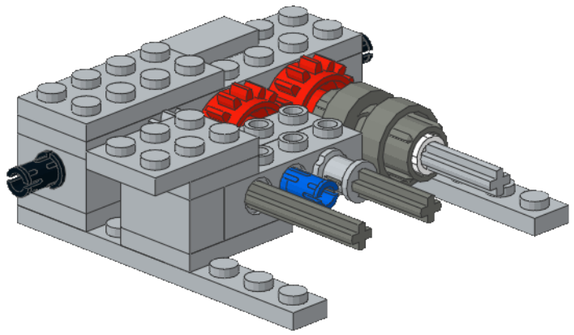

Copyright © 2016 by Maico Arts

9

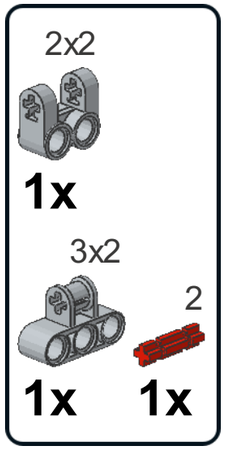

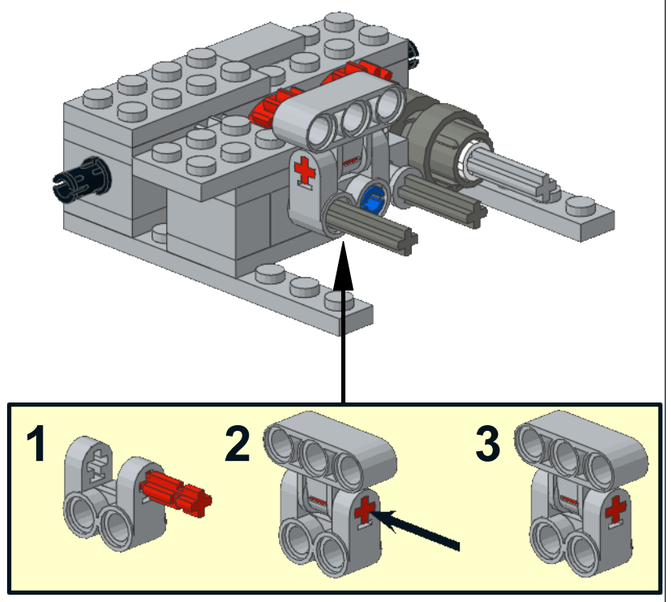

10

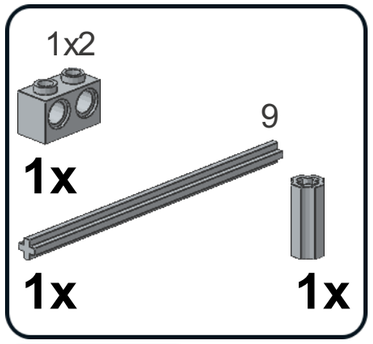

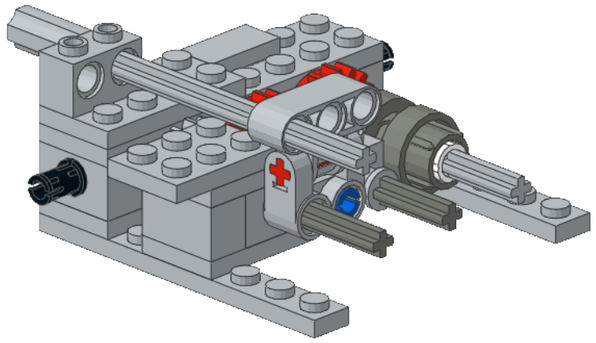

11

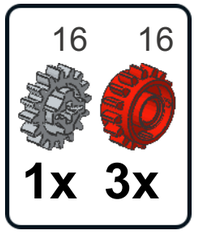

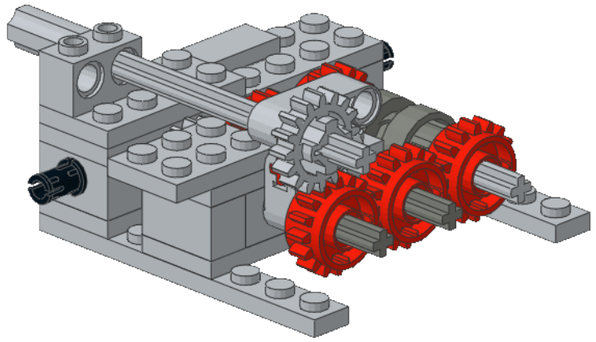

12

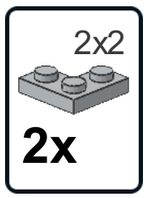

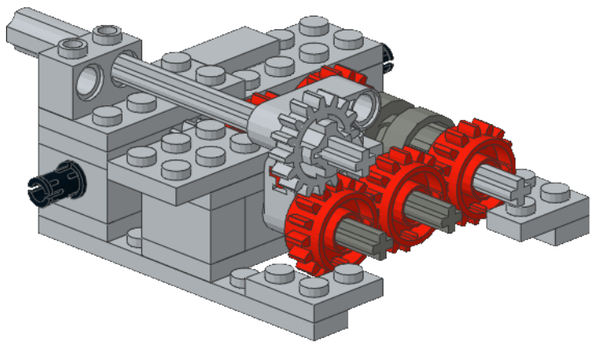

13

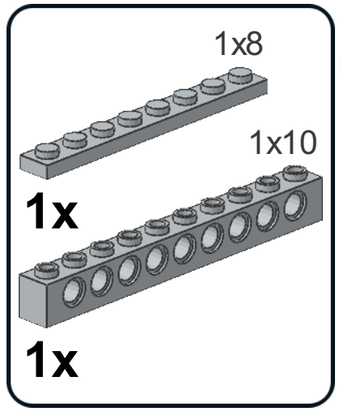

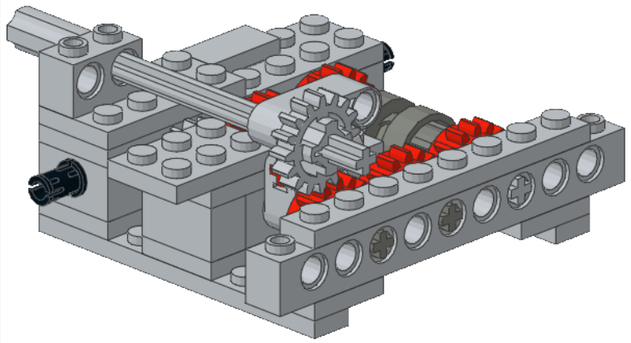

14

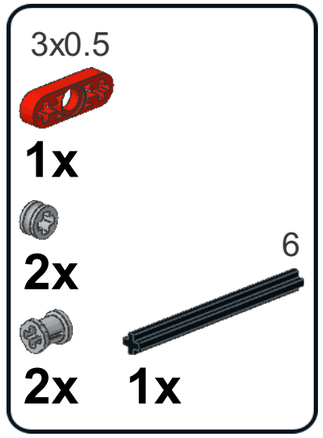

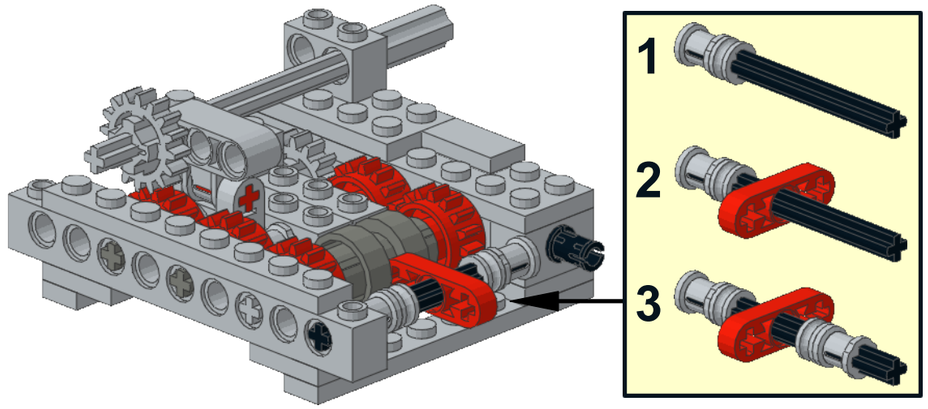

15

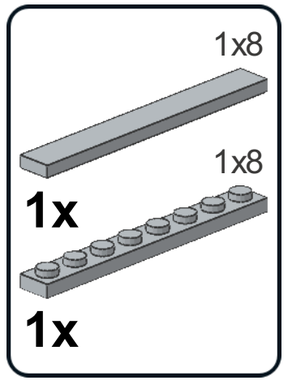

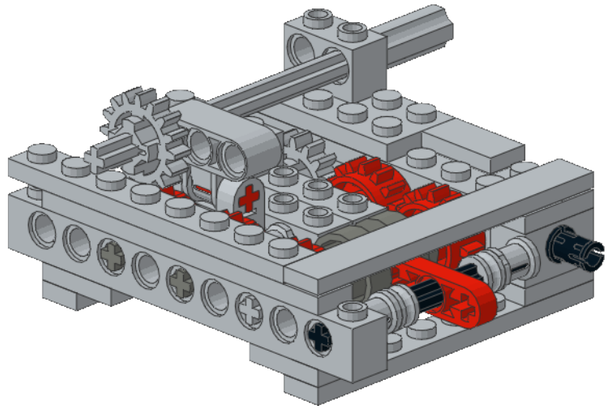

16

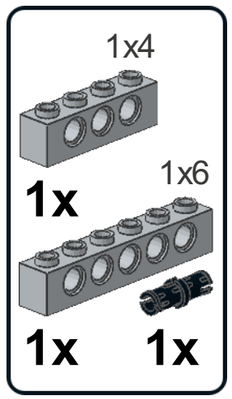

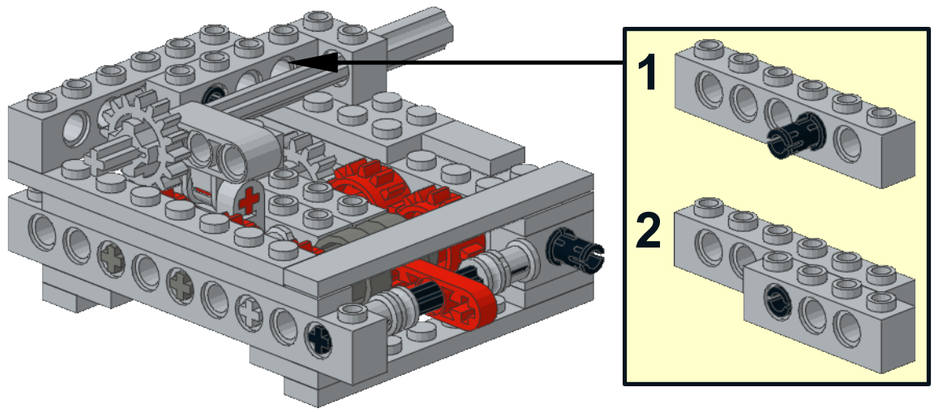

Copyright © 2016 by Maico Arts

17

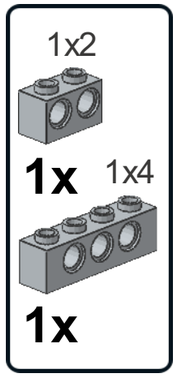

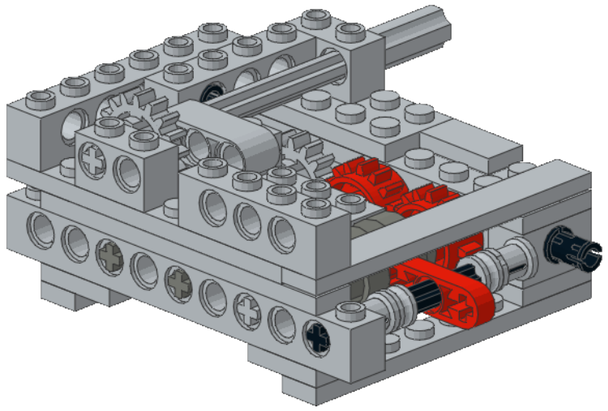

18

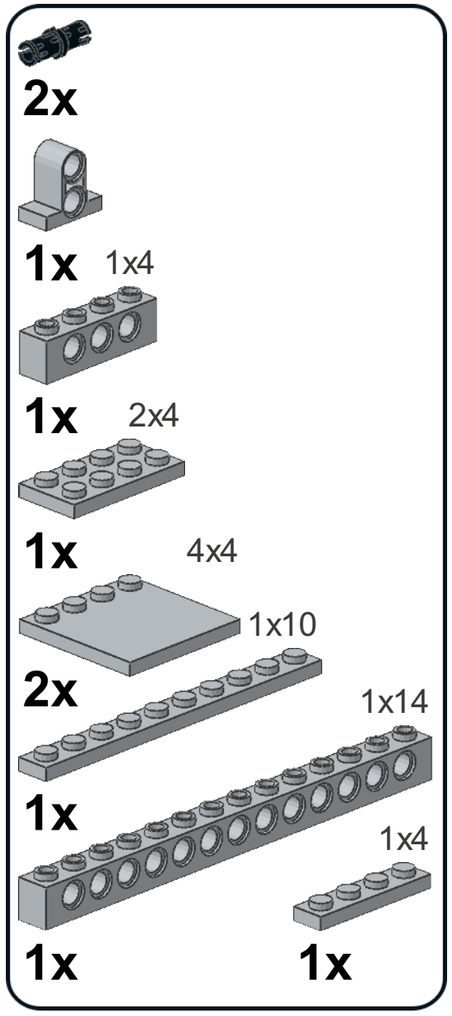

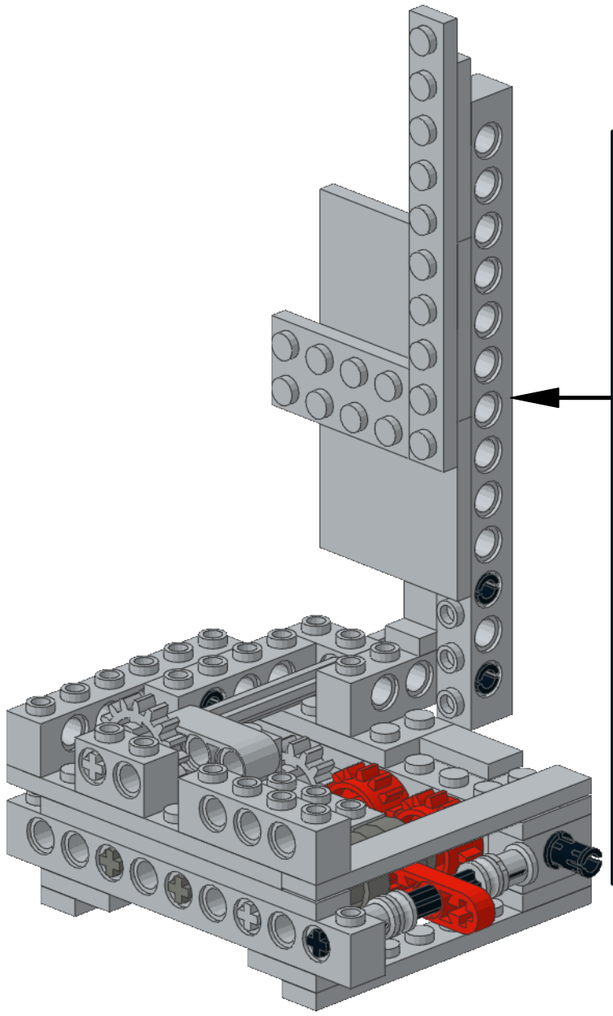

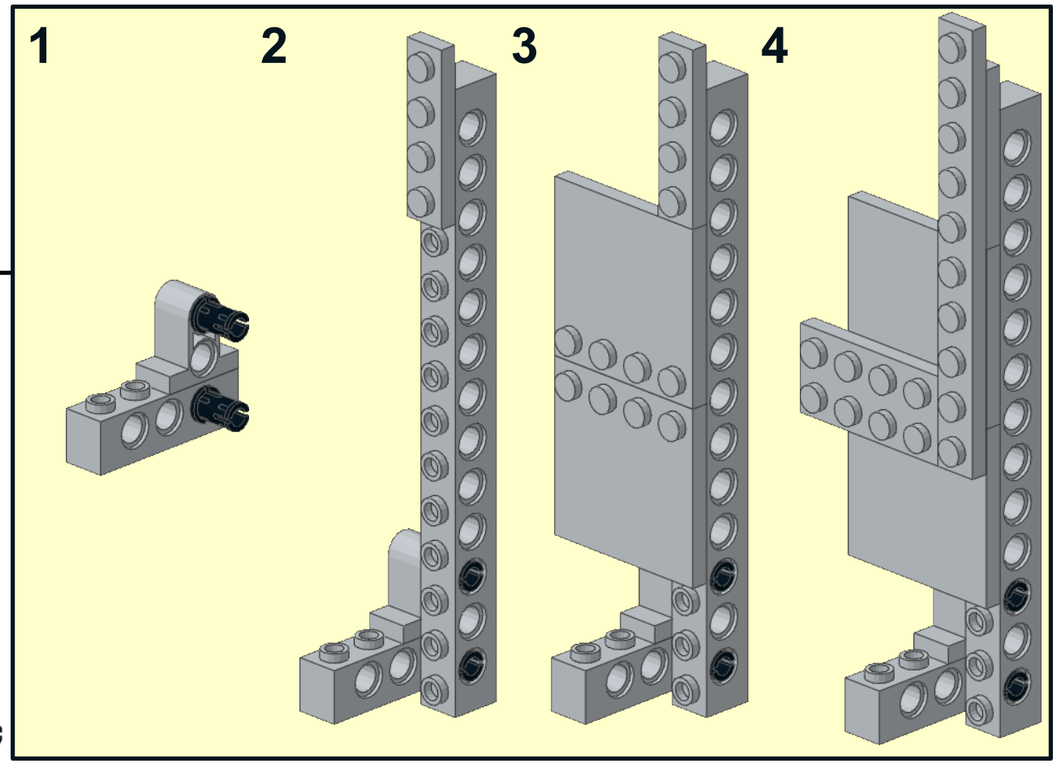

Copyright © 2016 by Maico Arts

19

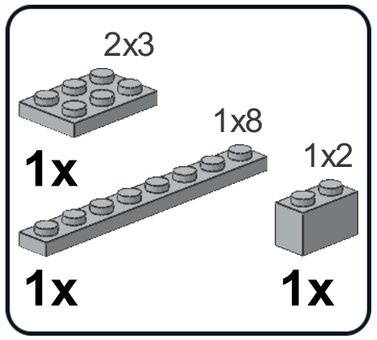

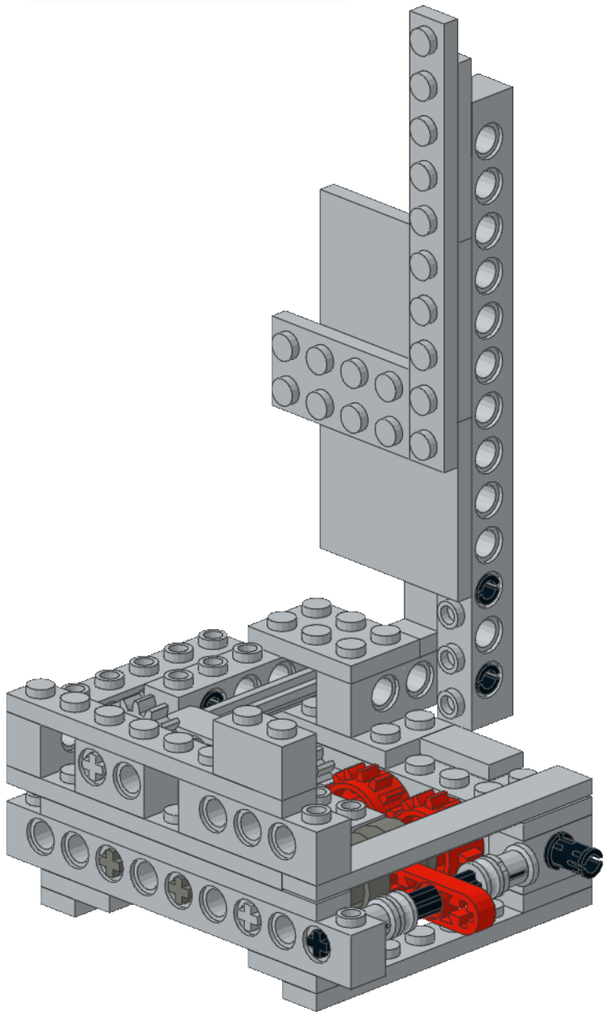

20

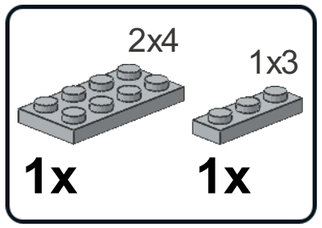

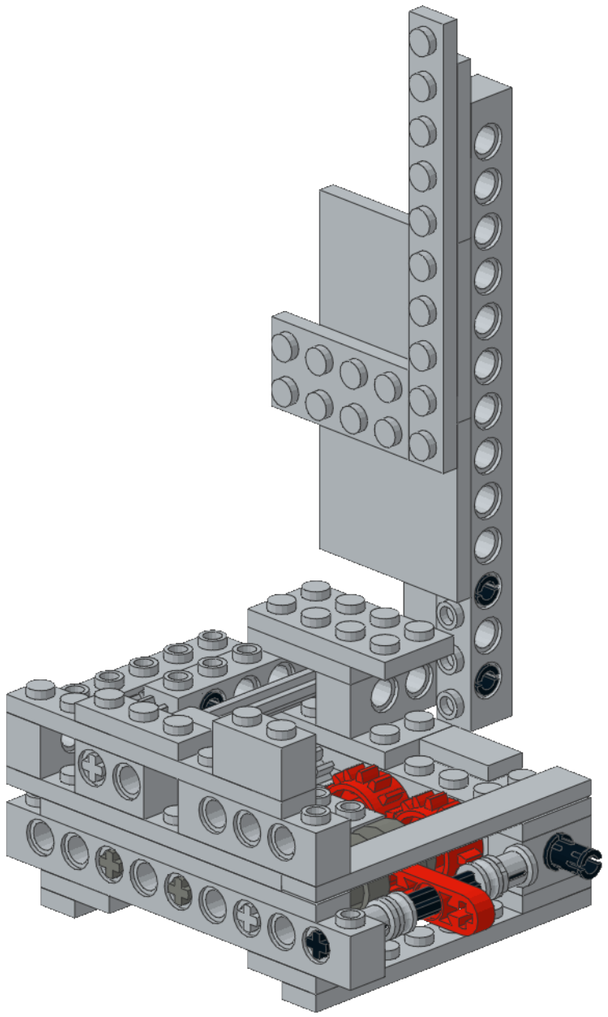

21

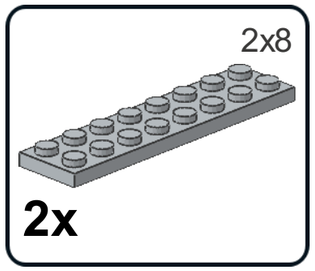

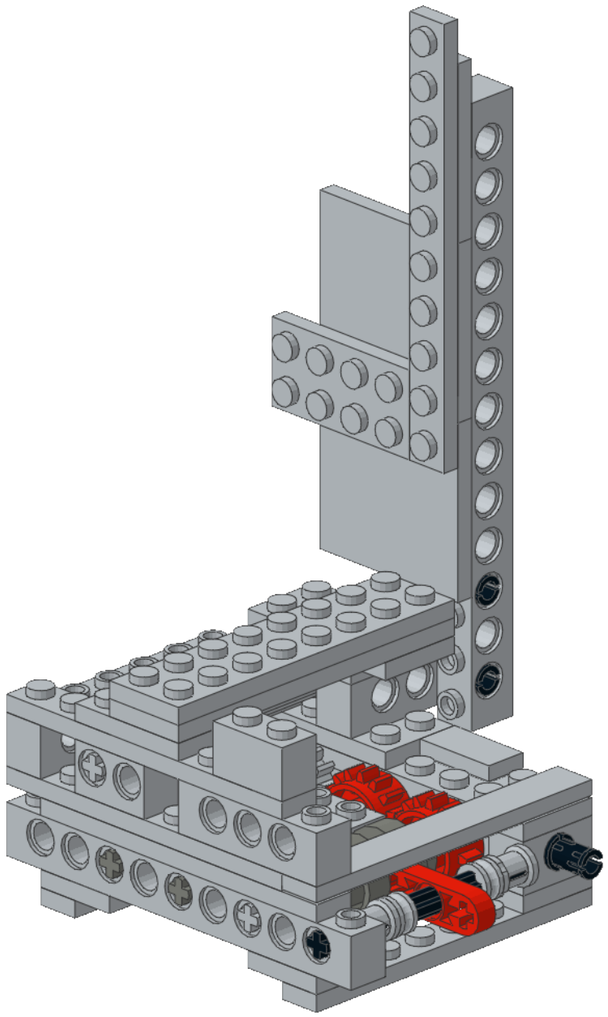

22

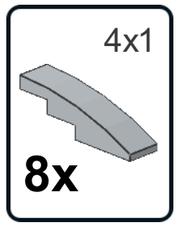

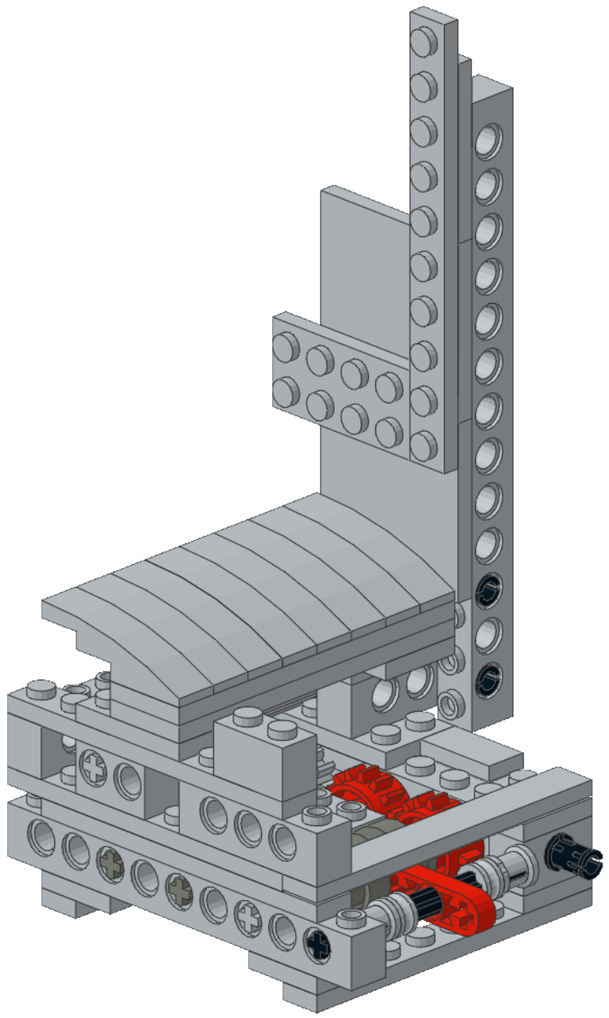

Copyright © 2016 by Maico Arts

23

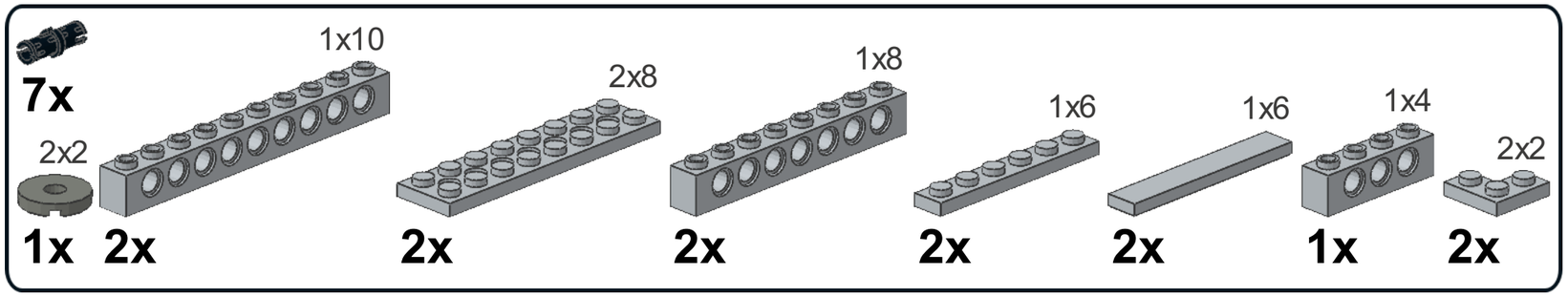

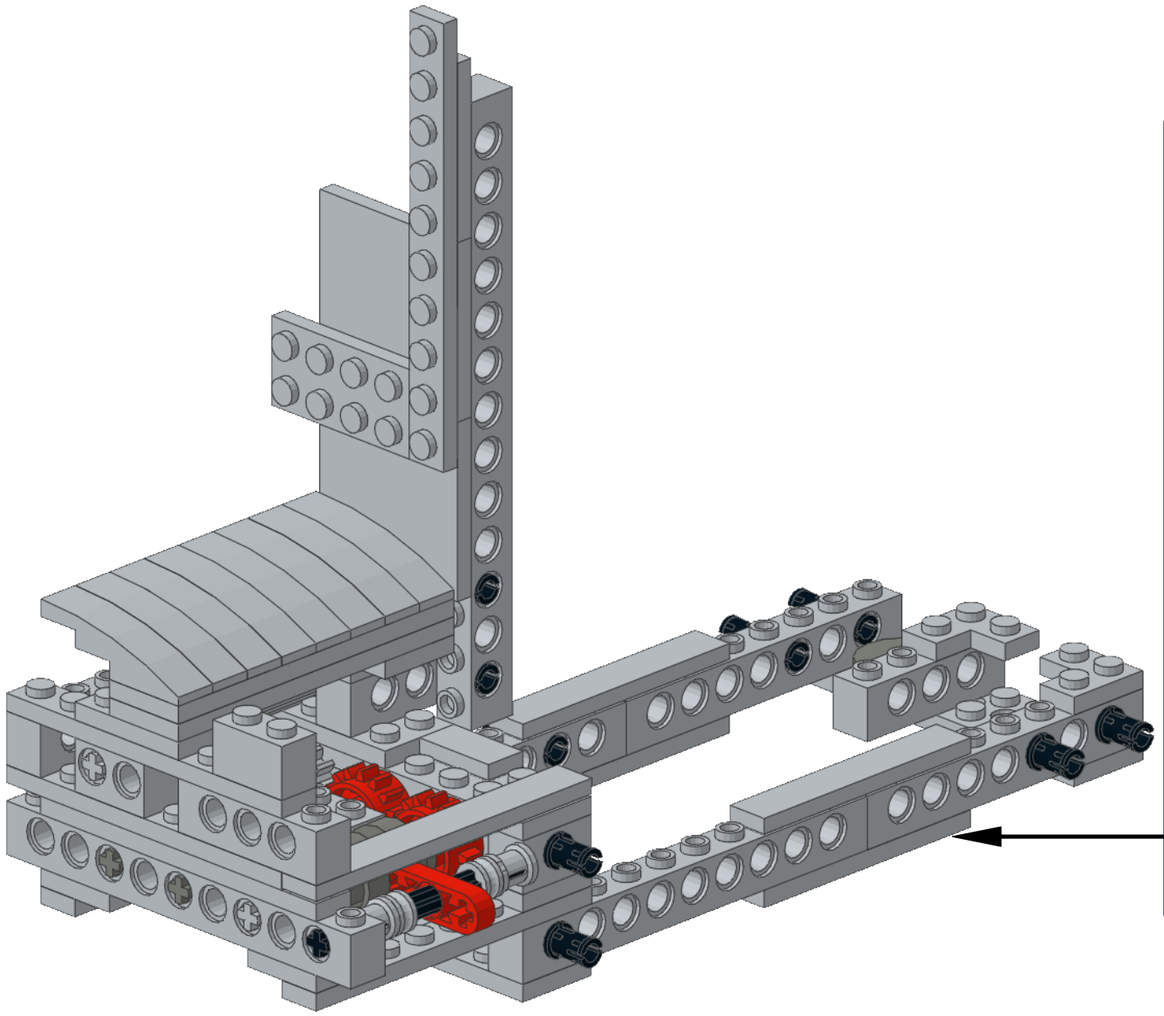

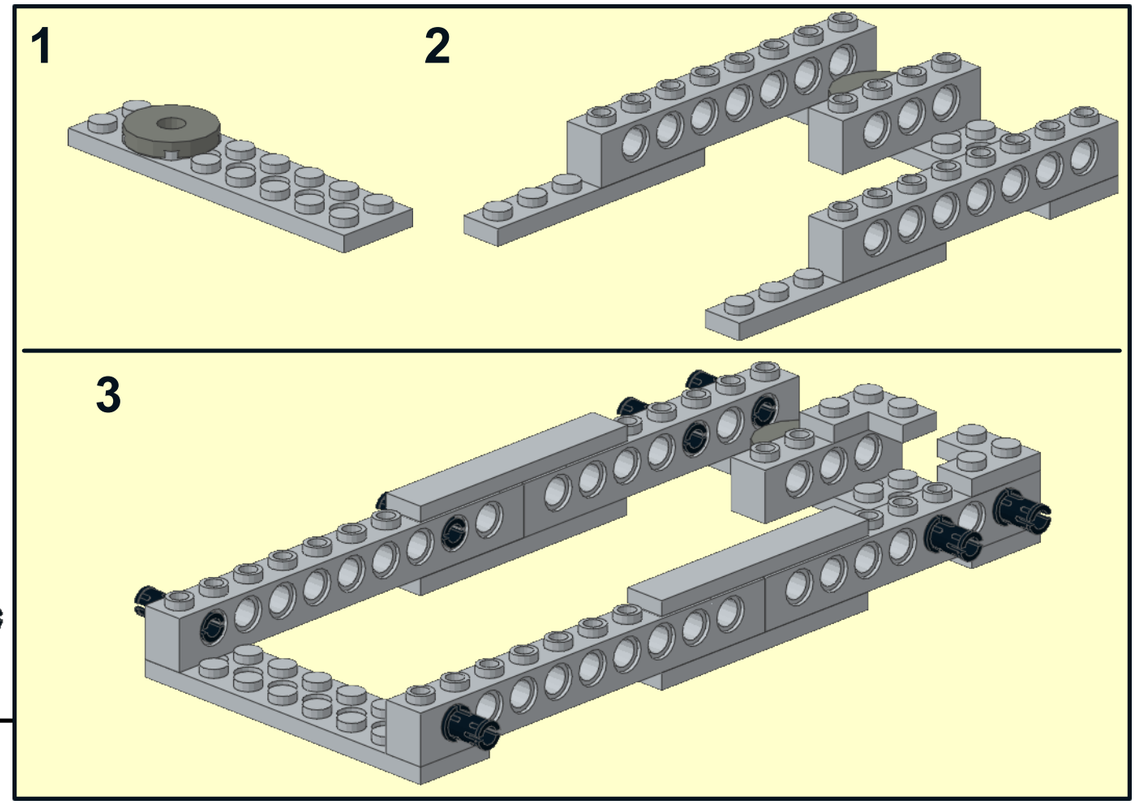

Copyright © 2016 by Maico Arts

24

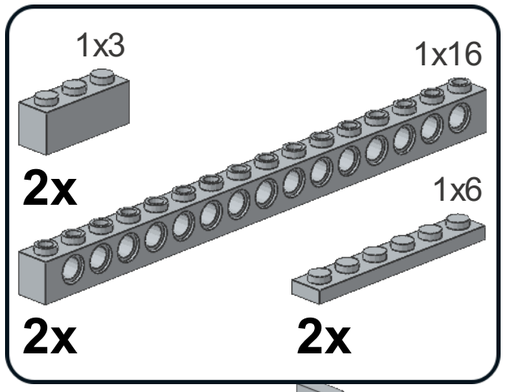

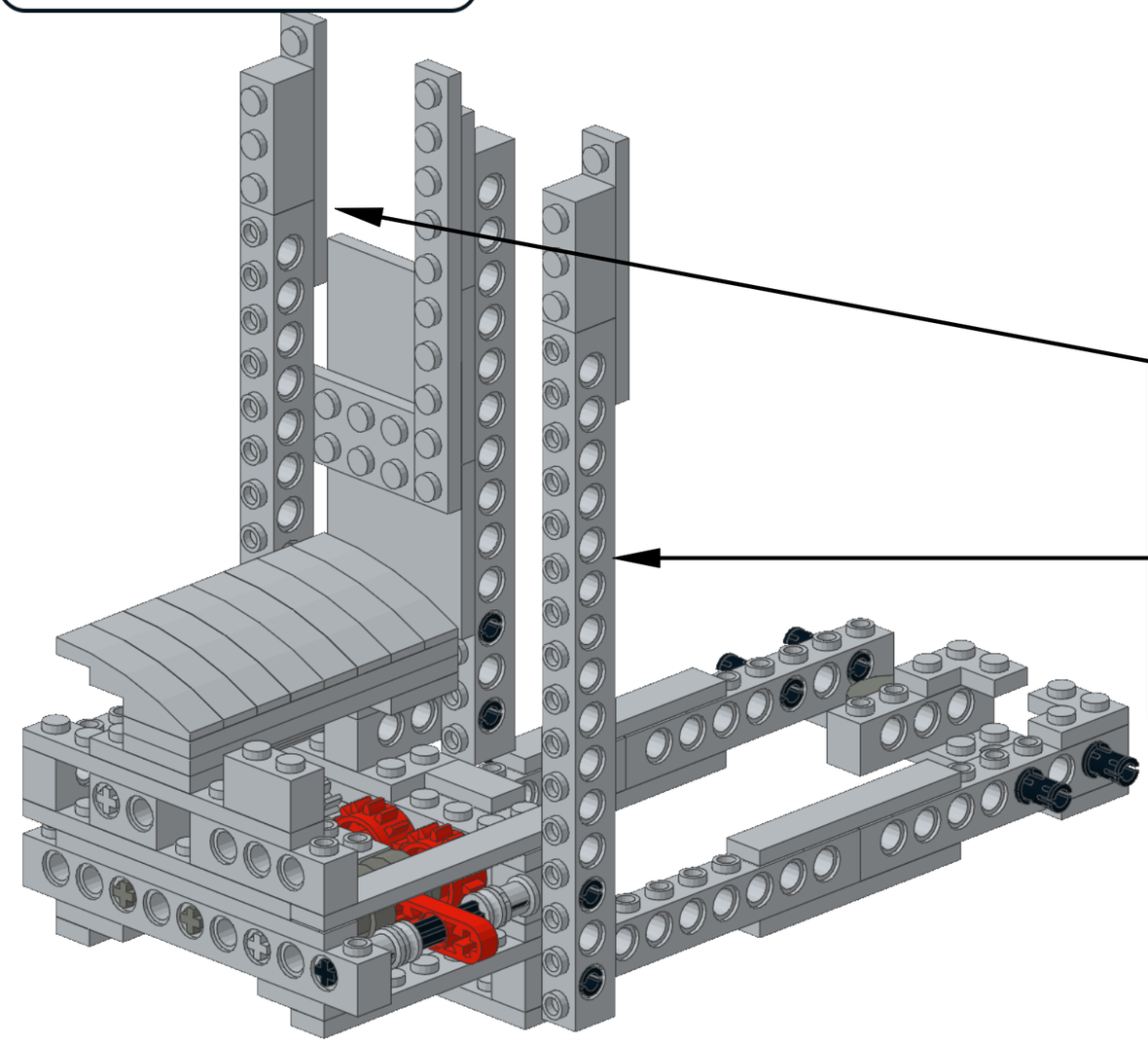

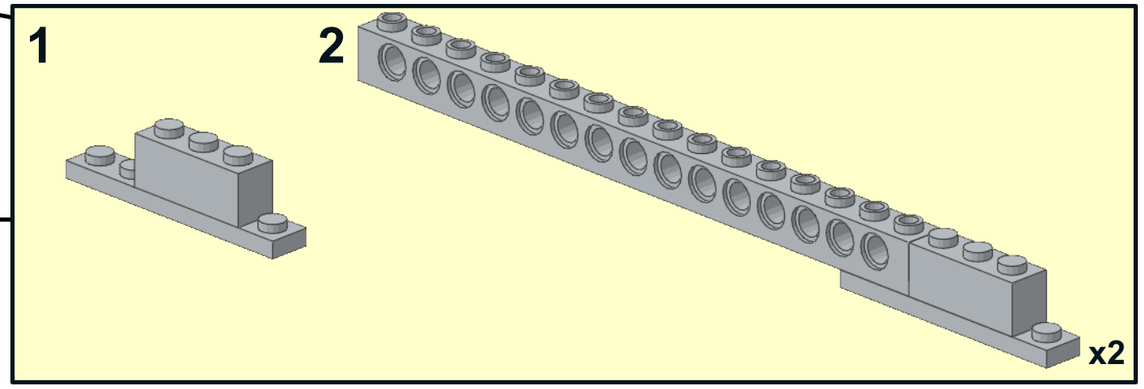

25

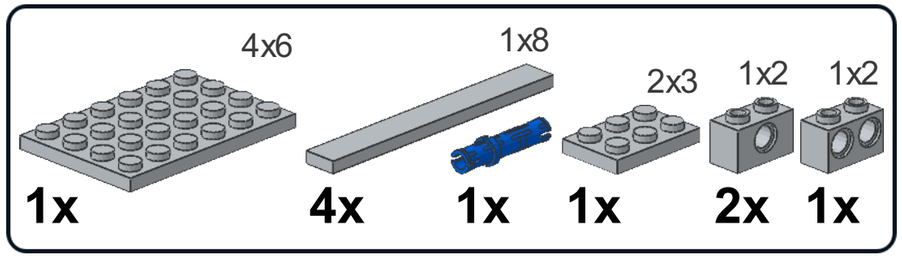
4x6
1x8
2x3
1x2
1x2
1x
4x
1x
1x
2x
1x

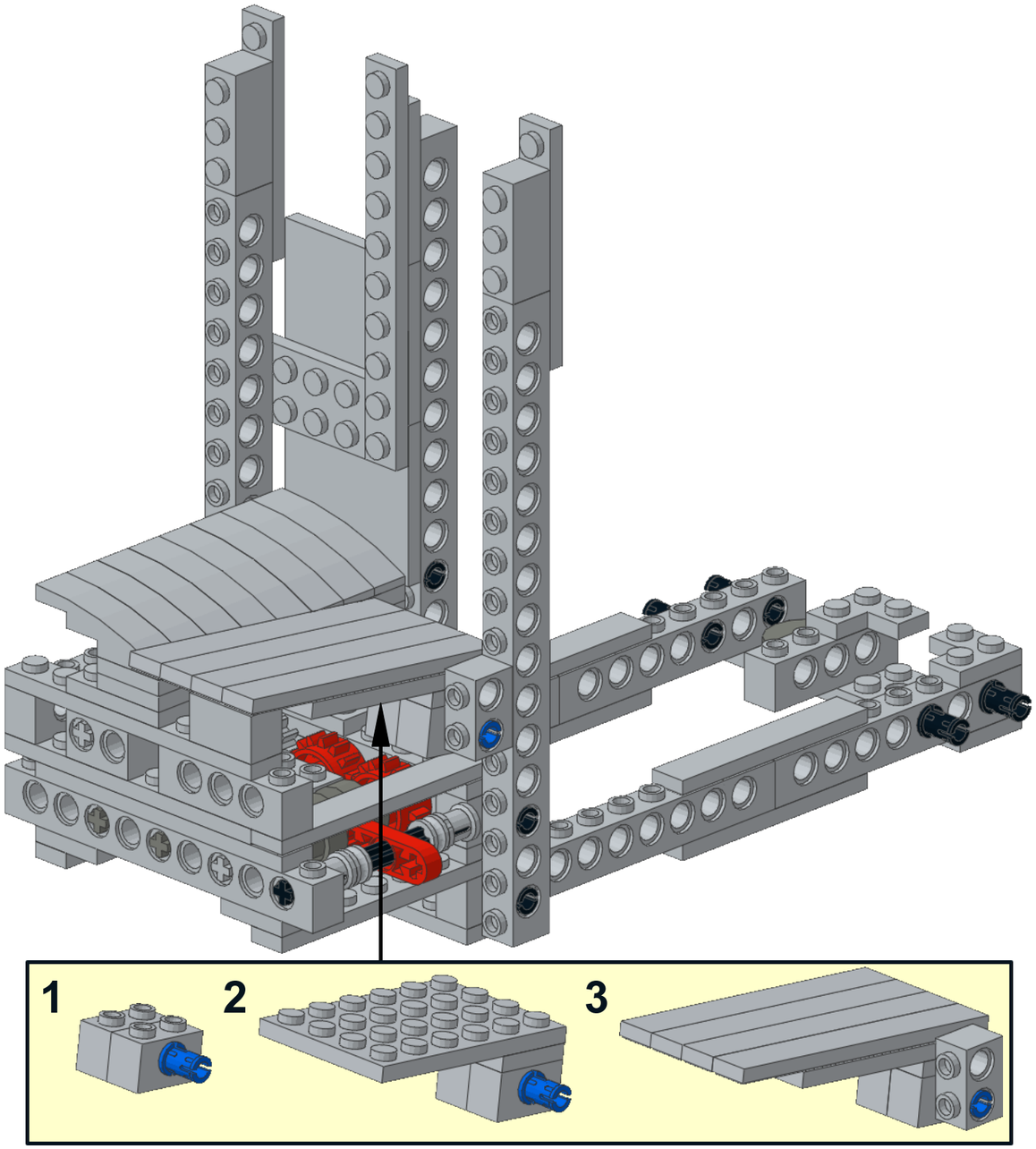
1
2
3

26

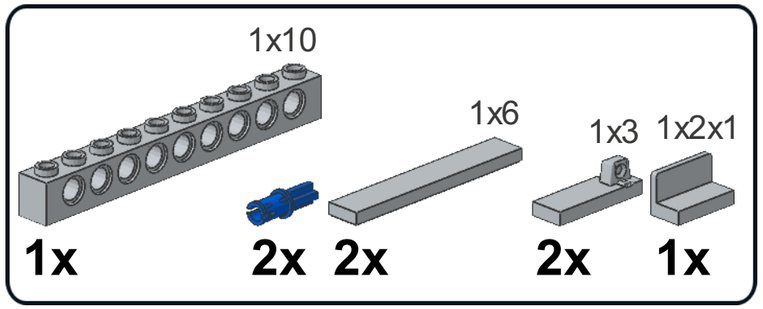
1x10
1x6
1x3
1x2x1
1x
2x
2x
2x
1x

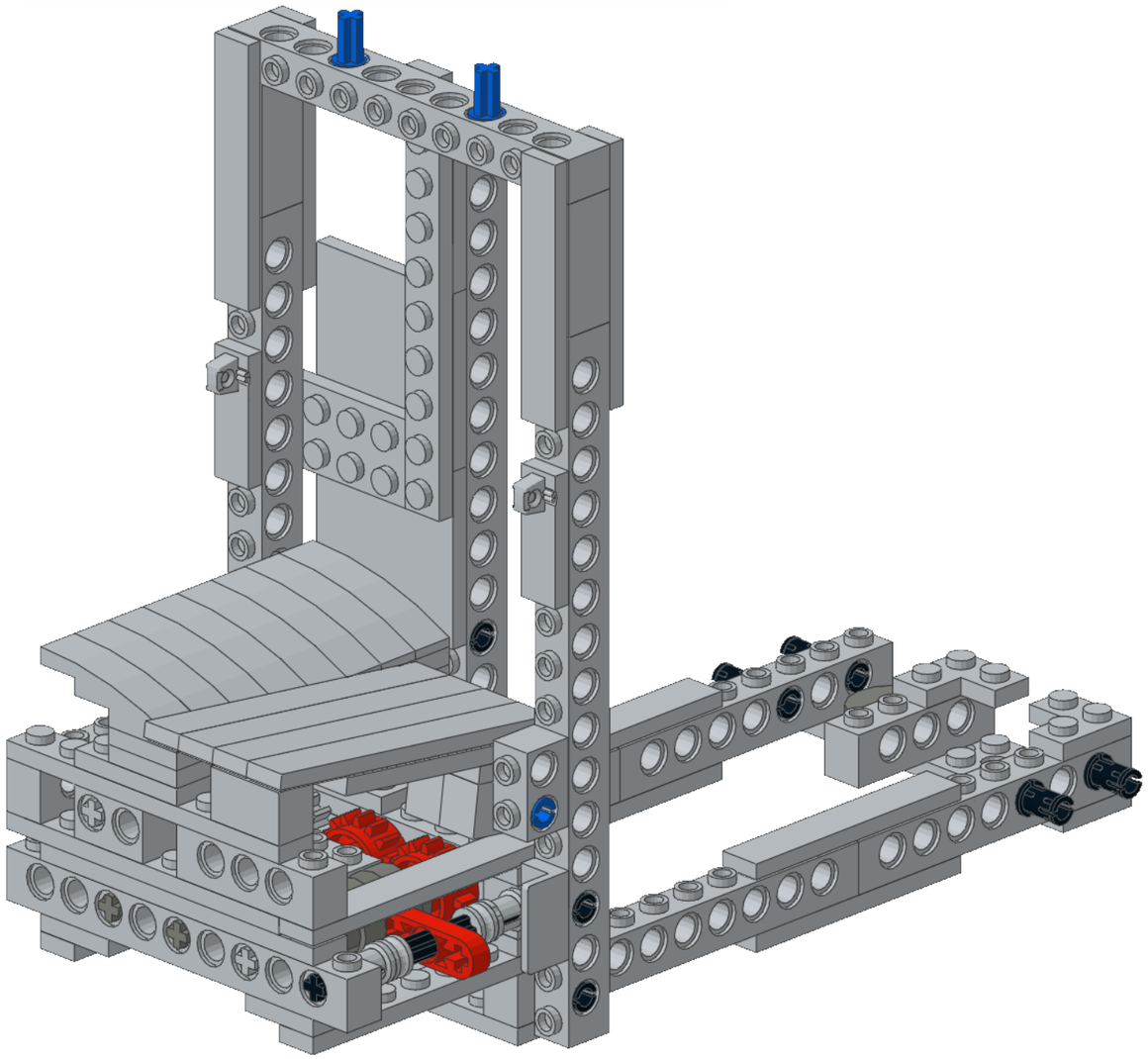

27

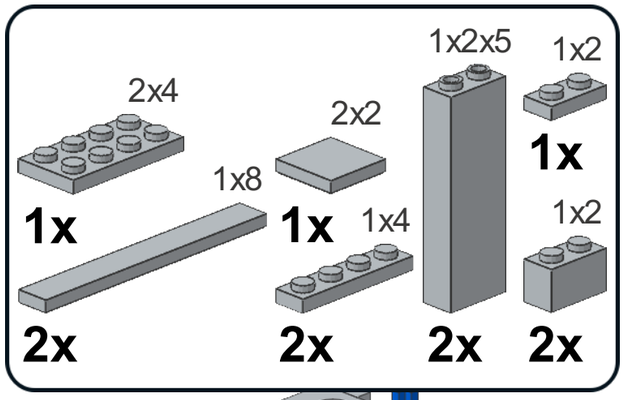

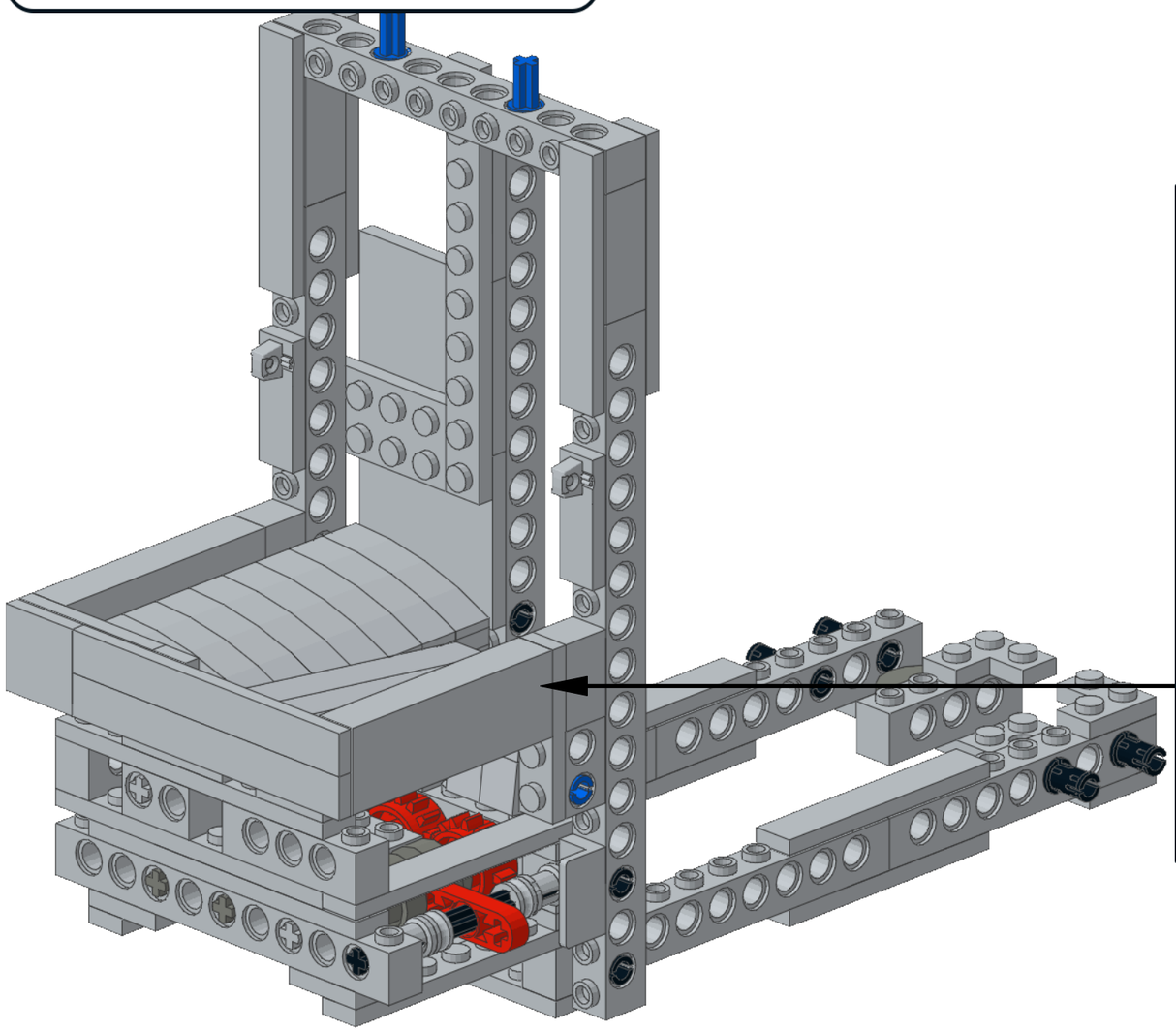

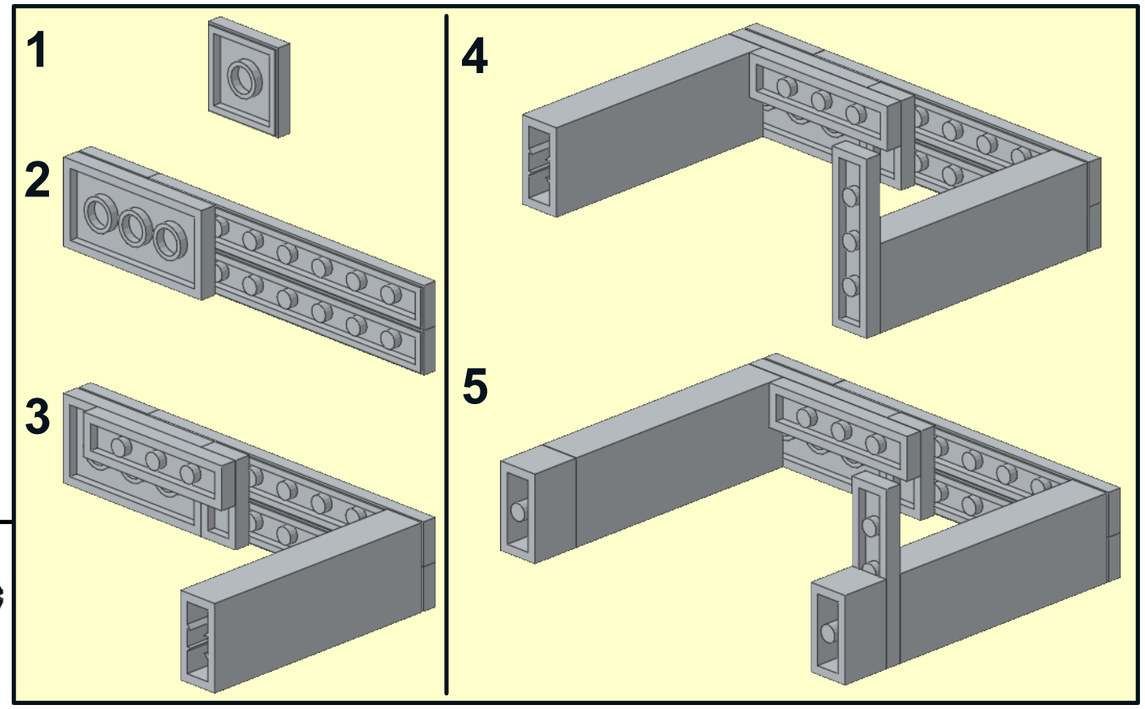

28

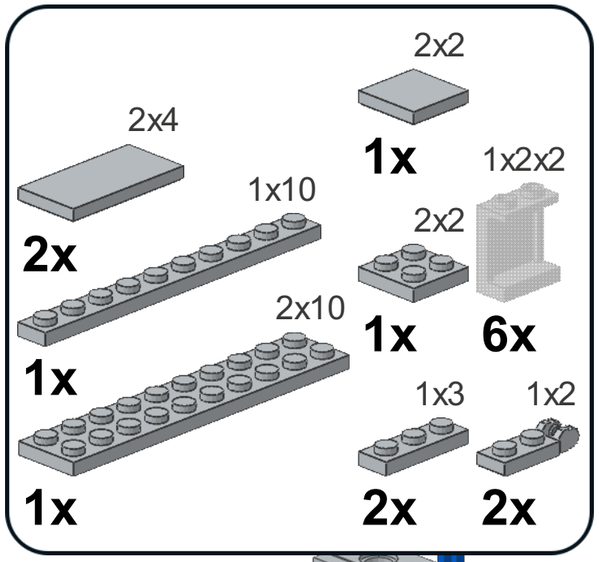
2x4
2x
1x10
1x
2x10
1x
2x2
1x
2x2
1x
1x2x2
6x
1x3
2x
1x2
2x

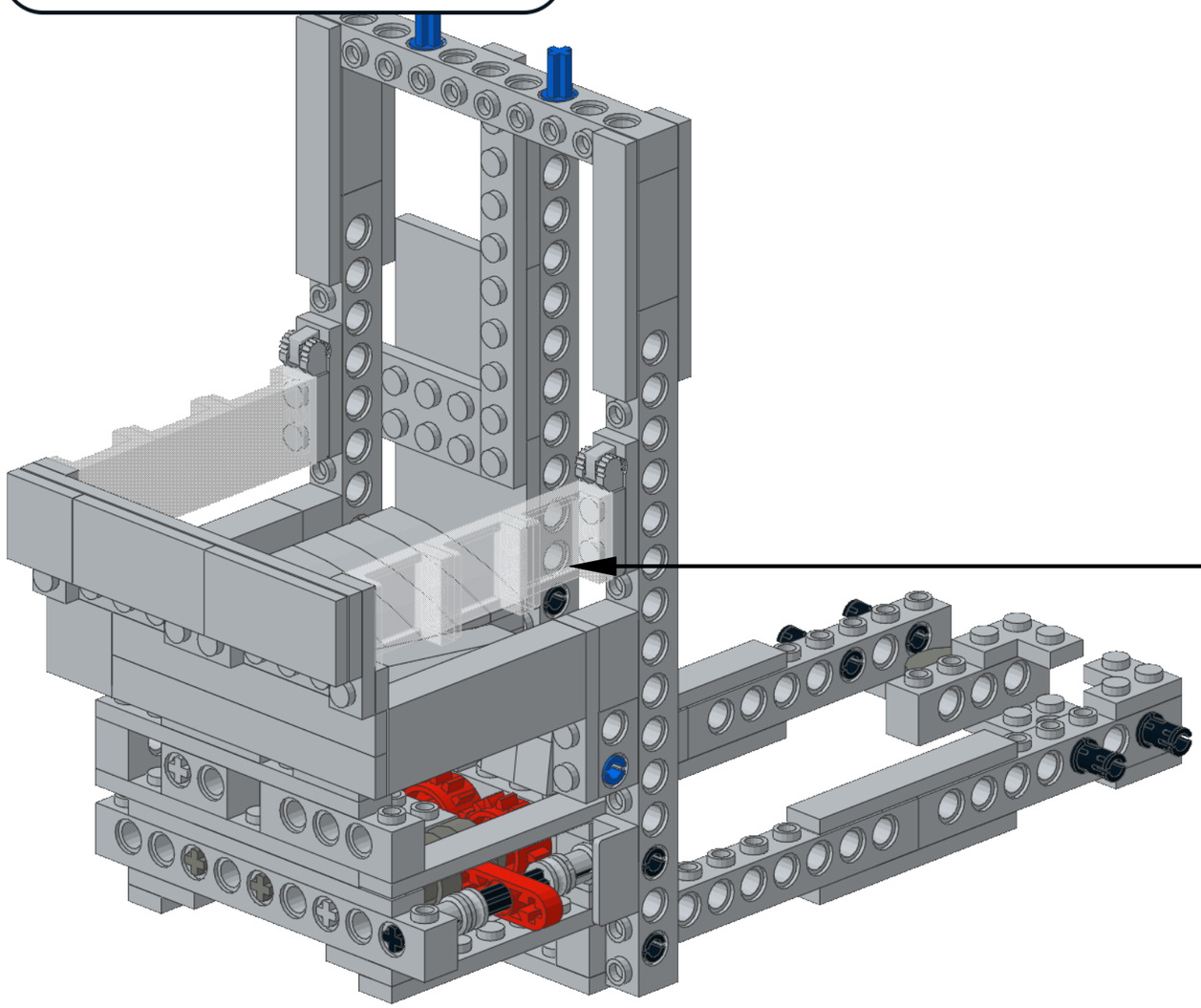

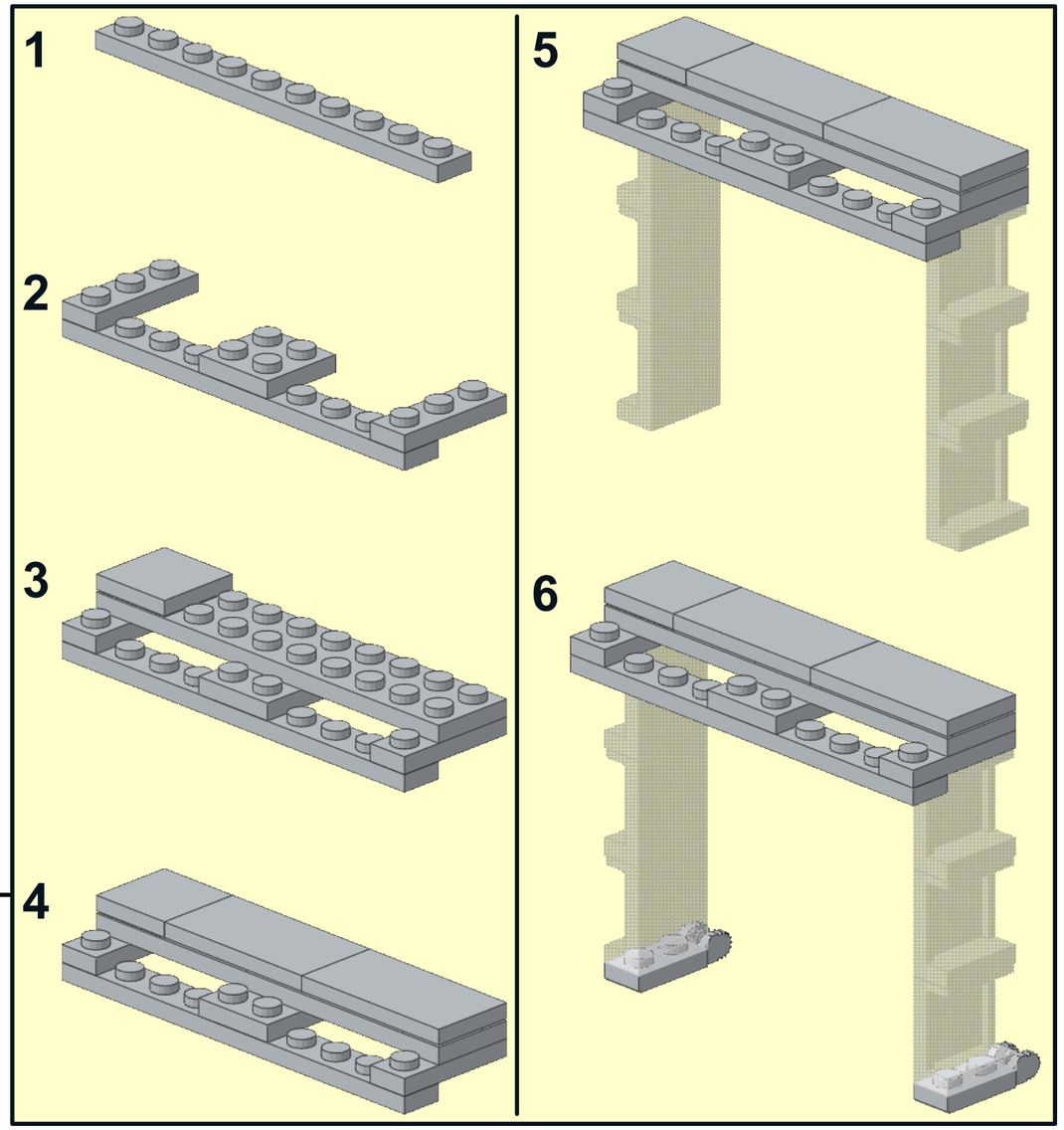
1
2
3
4
5
6

29

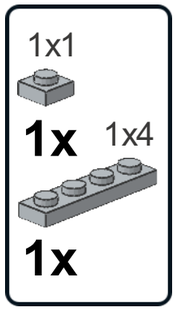

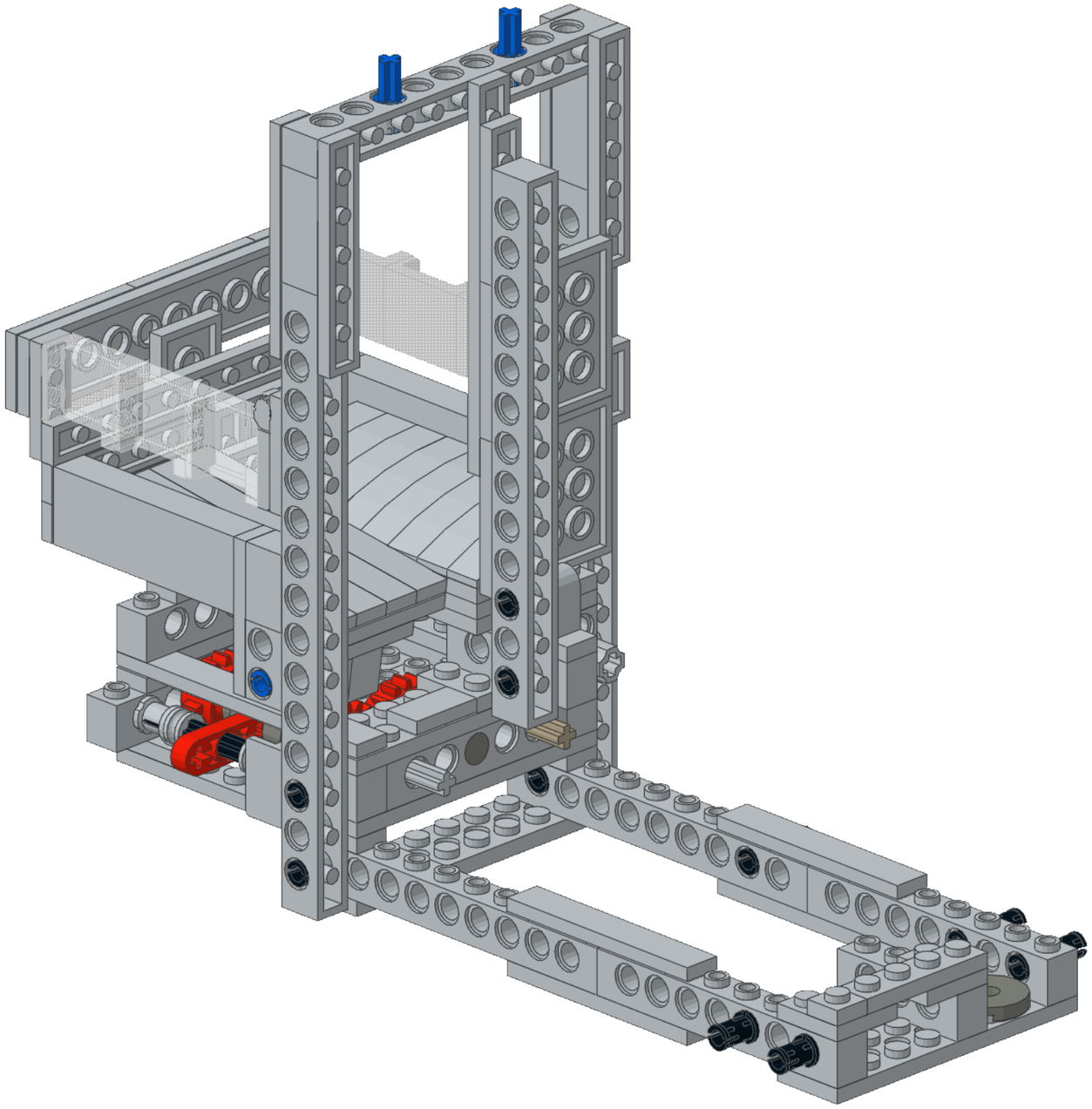

30

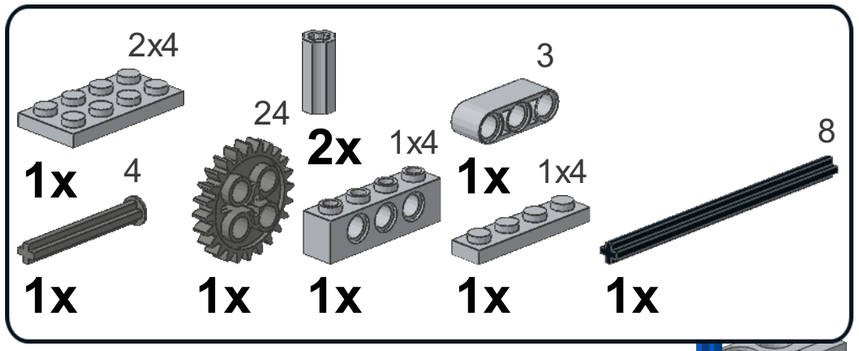

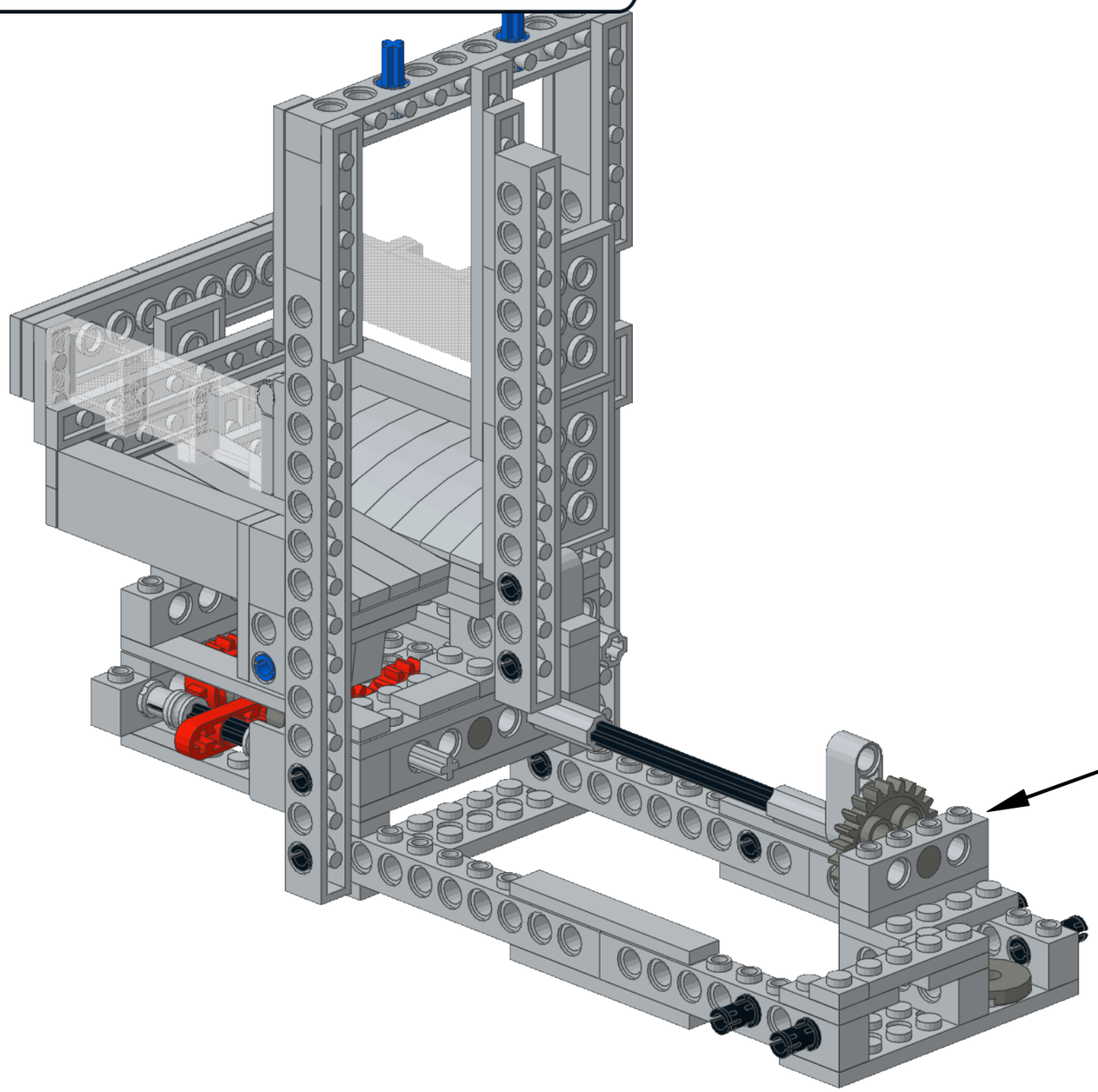

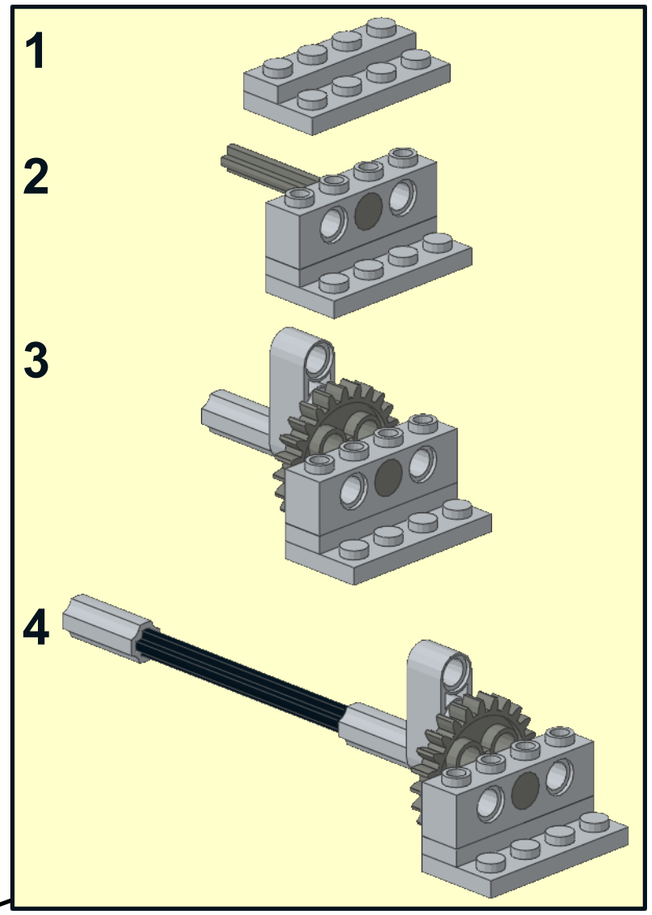

1

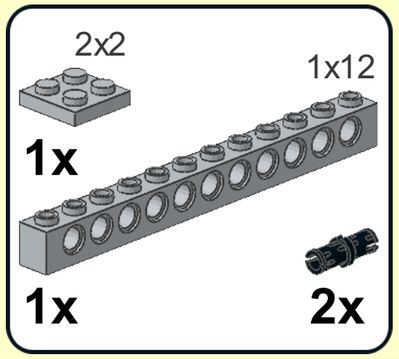

2

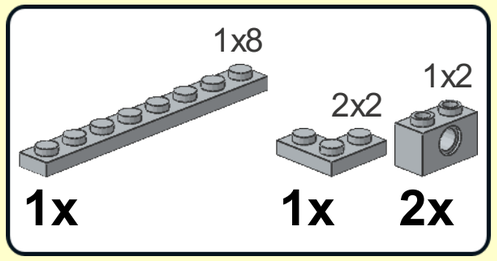

3

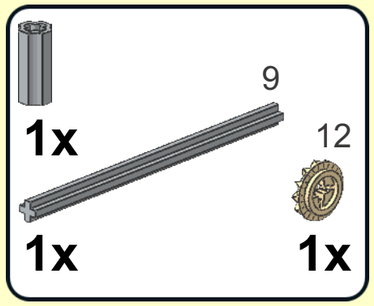

4

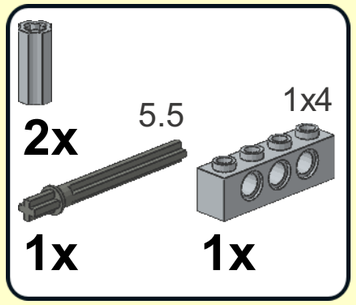

5

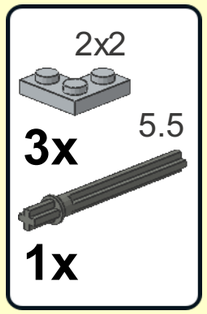

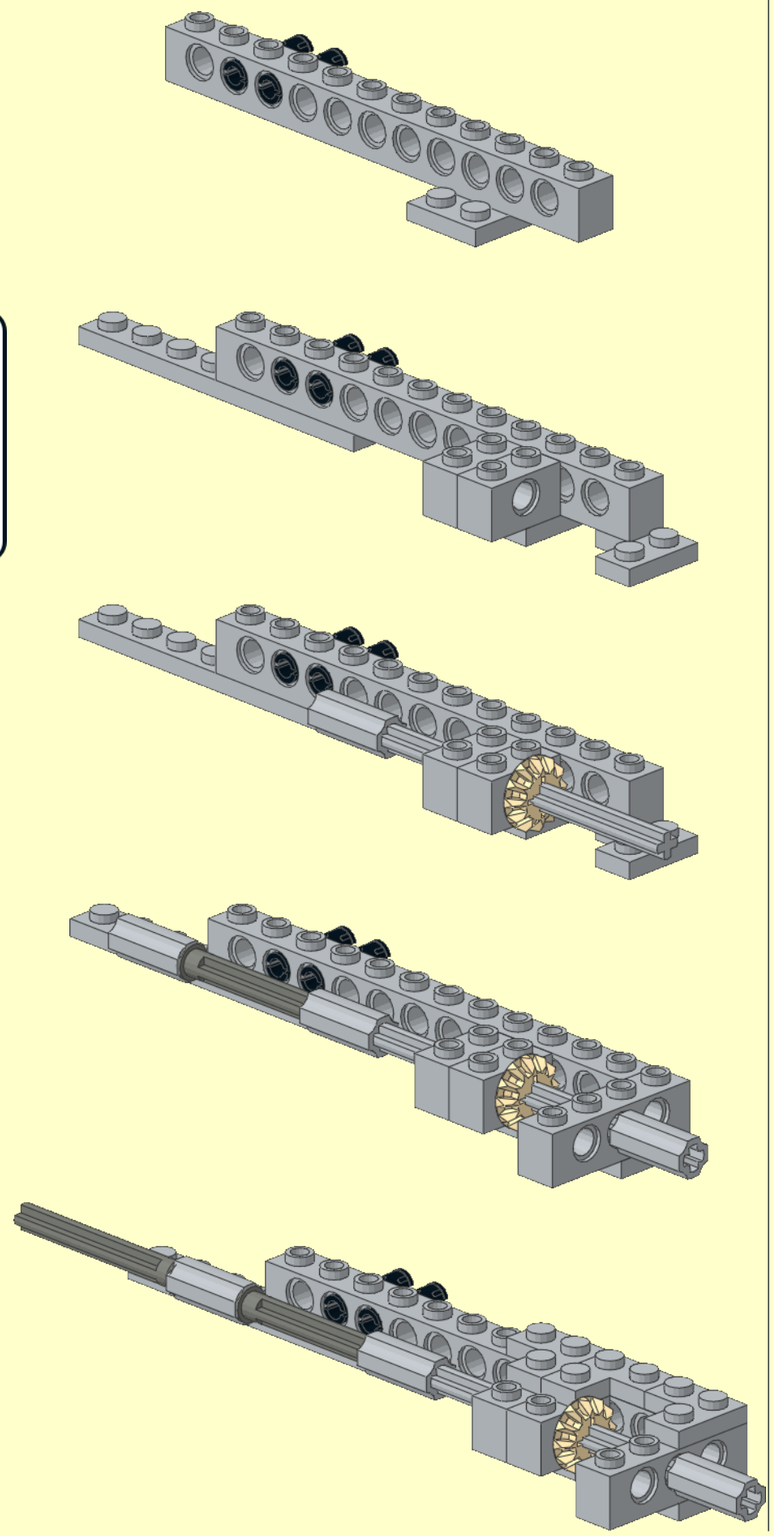

6

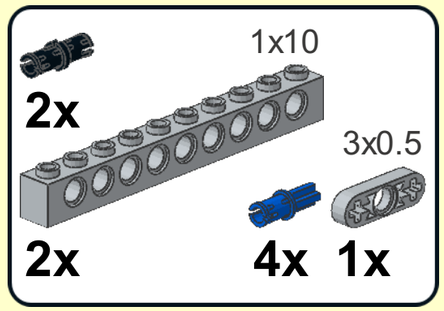

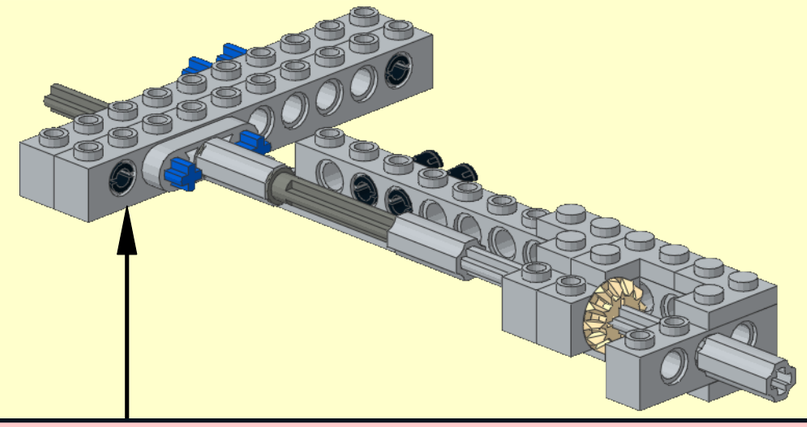

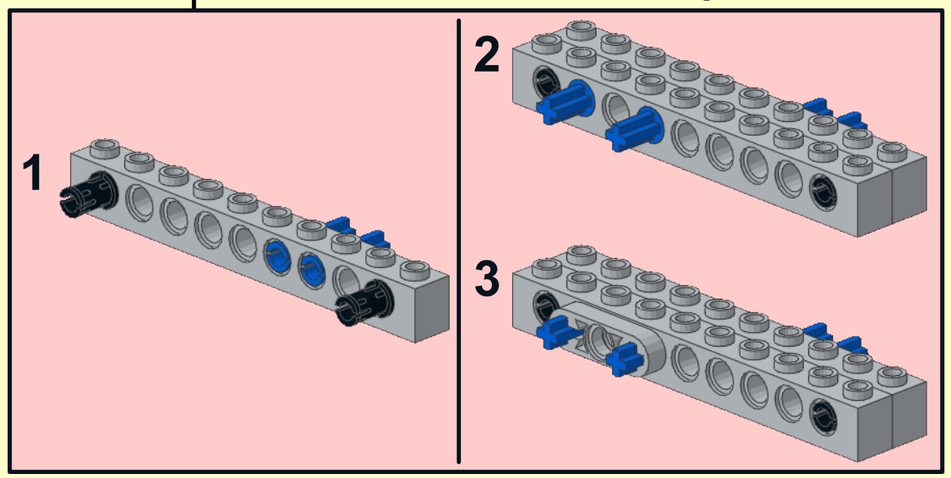

Copyright © 2016 by Maico Arts

7

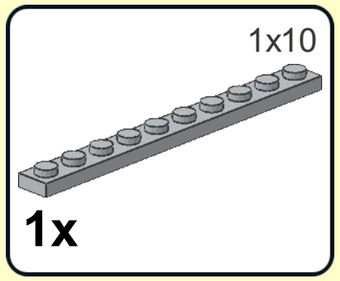

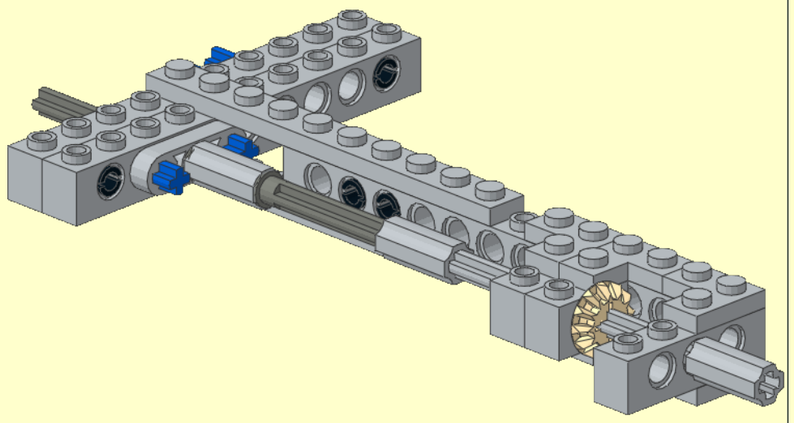

8

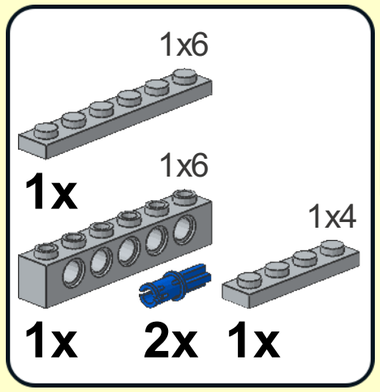

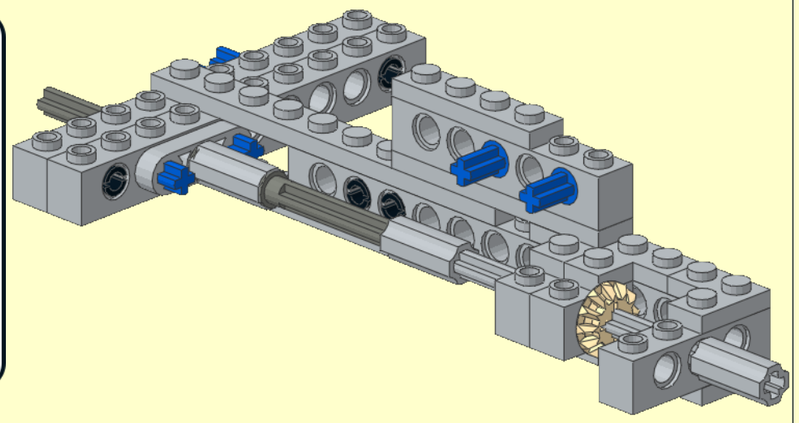

9

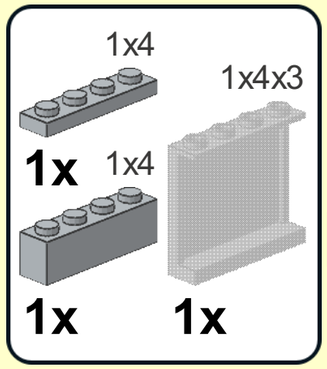

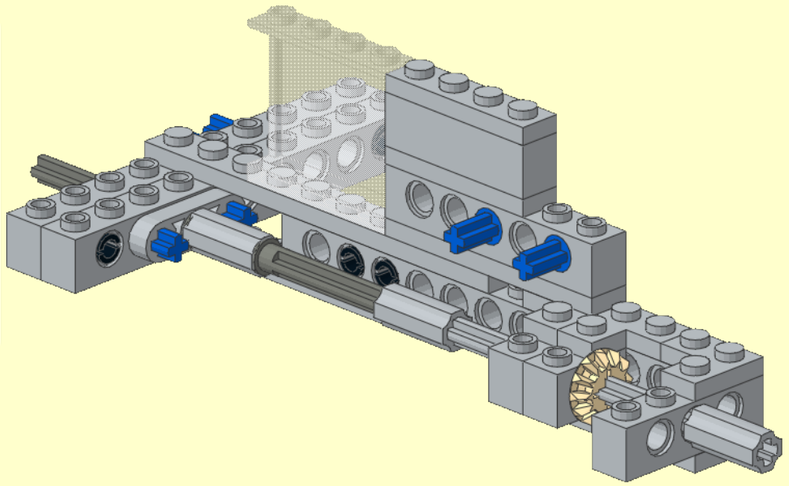

10

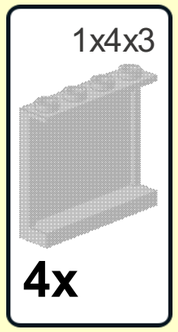

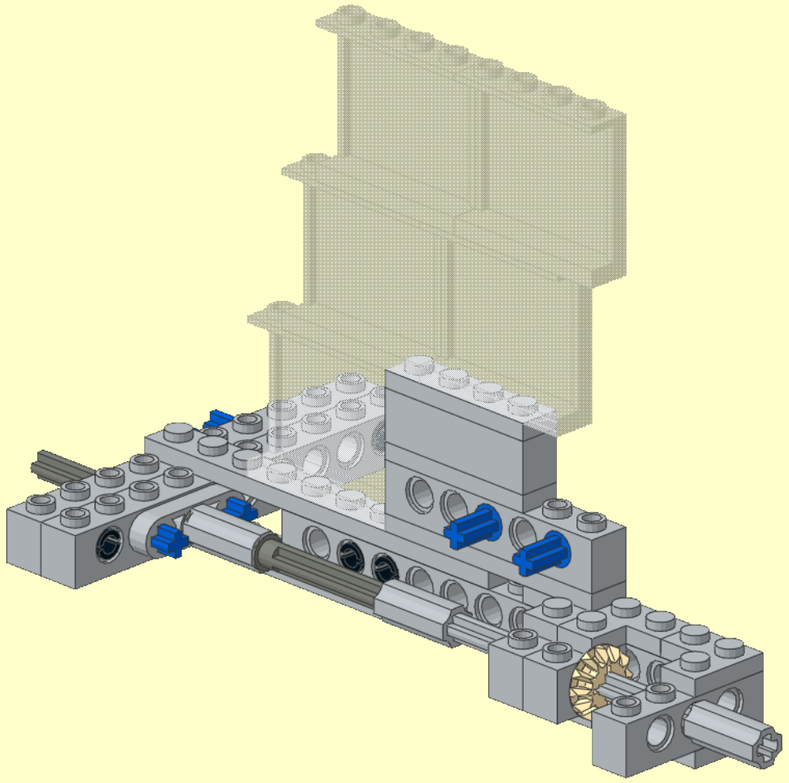

Copyright © 2016 by Maico Arts

11

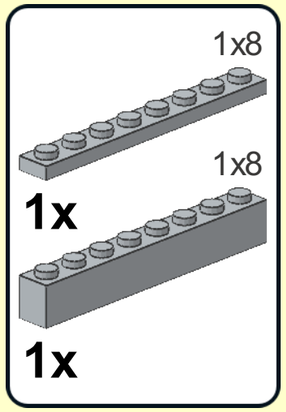

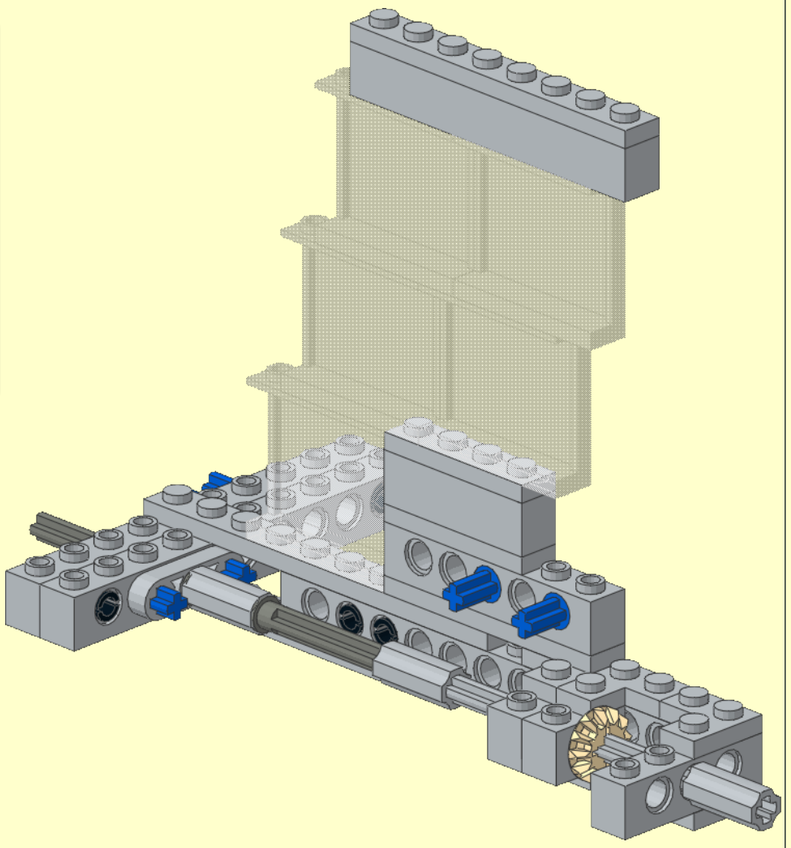

12

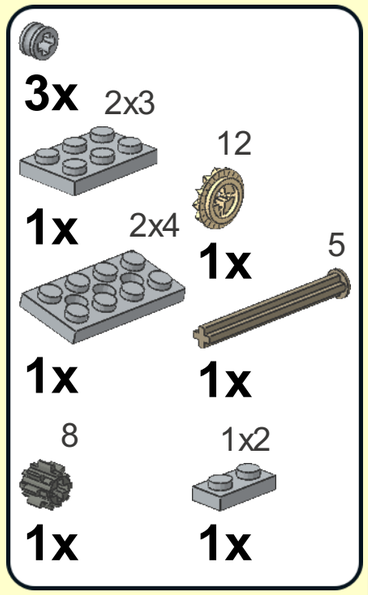

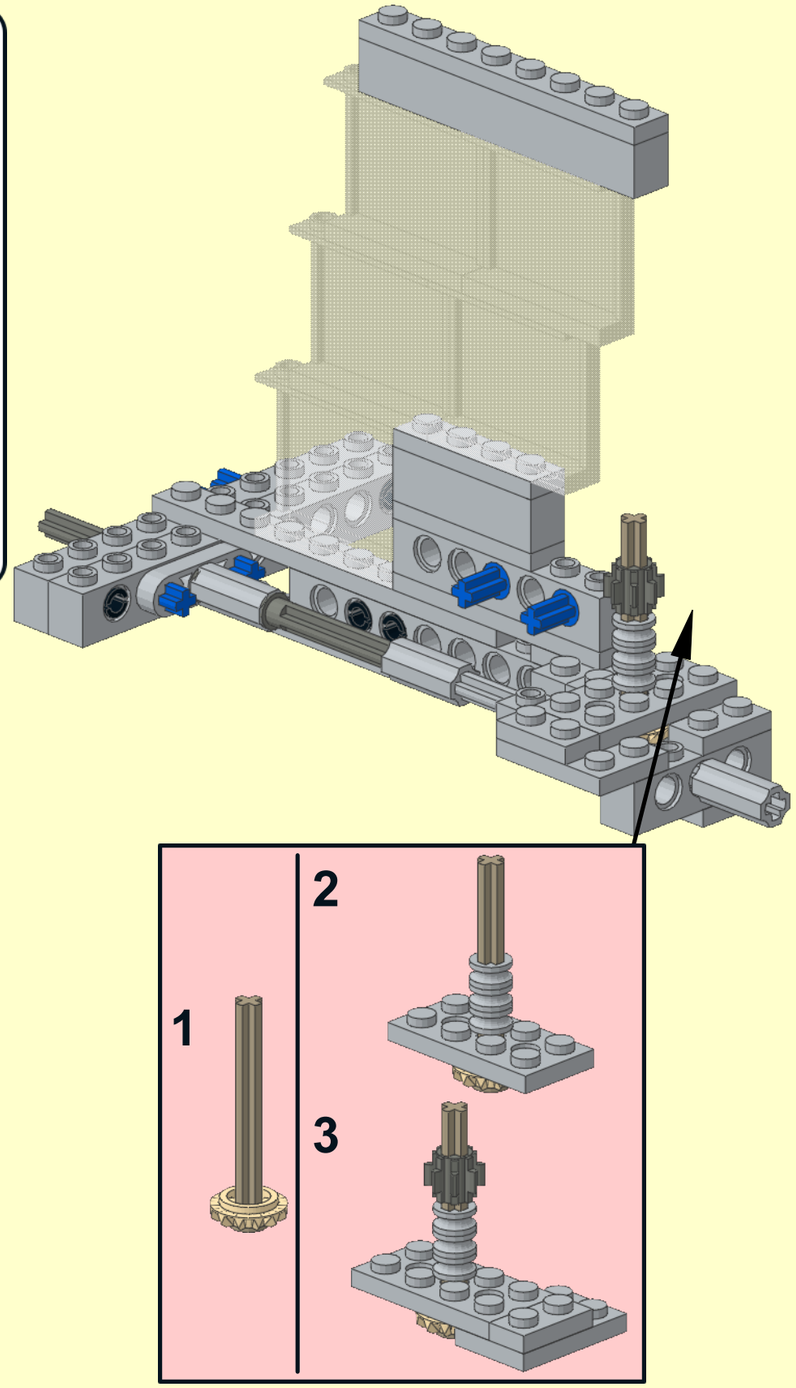

Copyright © 2016 by Maico Arts

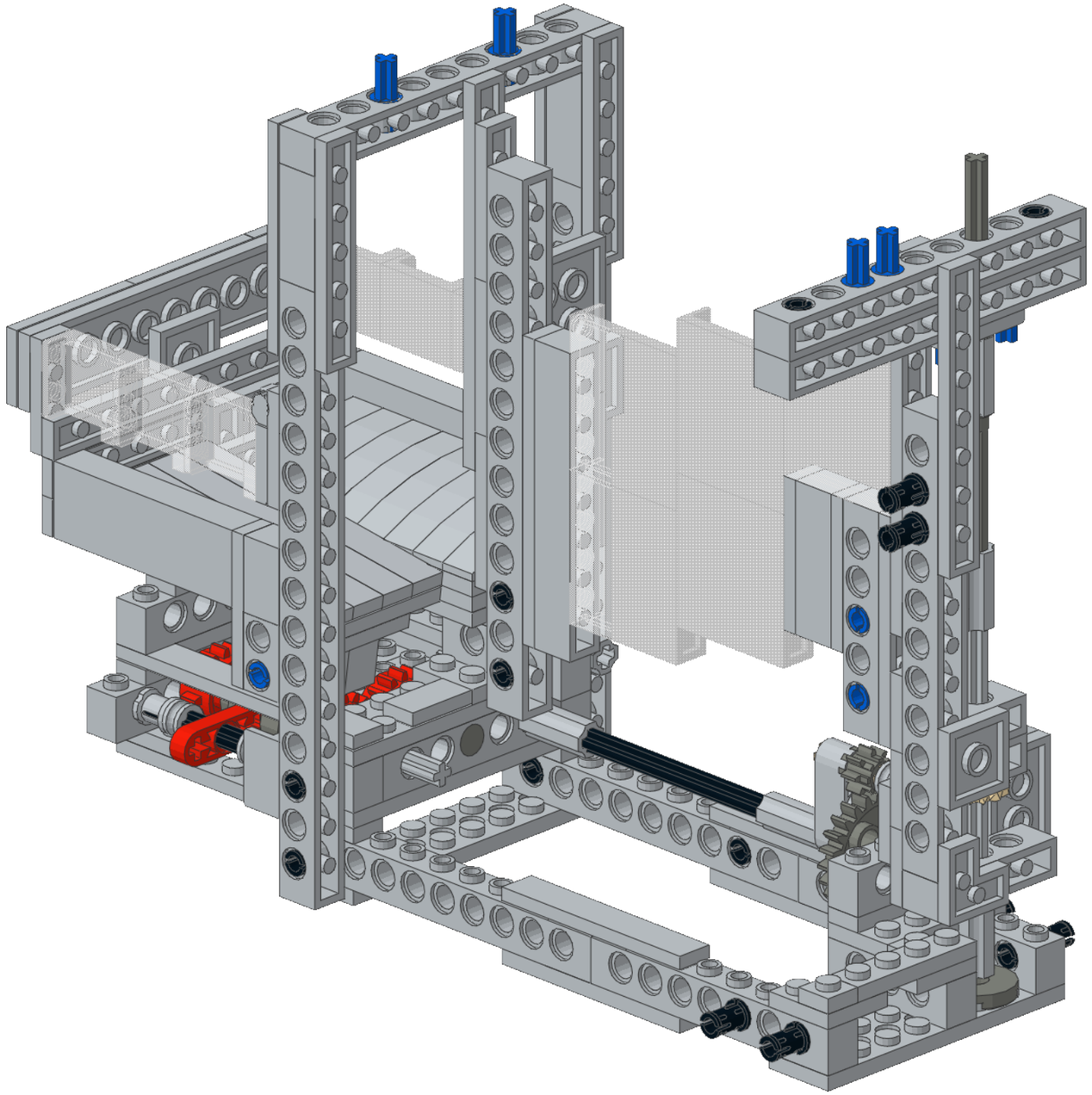

Copyright © 2016 by Maico Arts

32

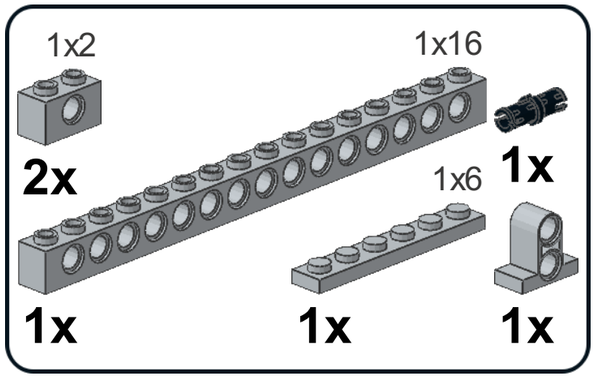

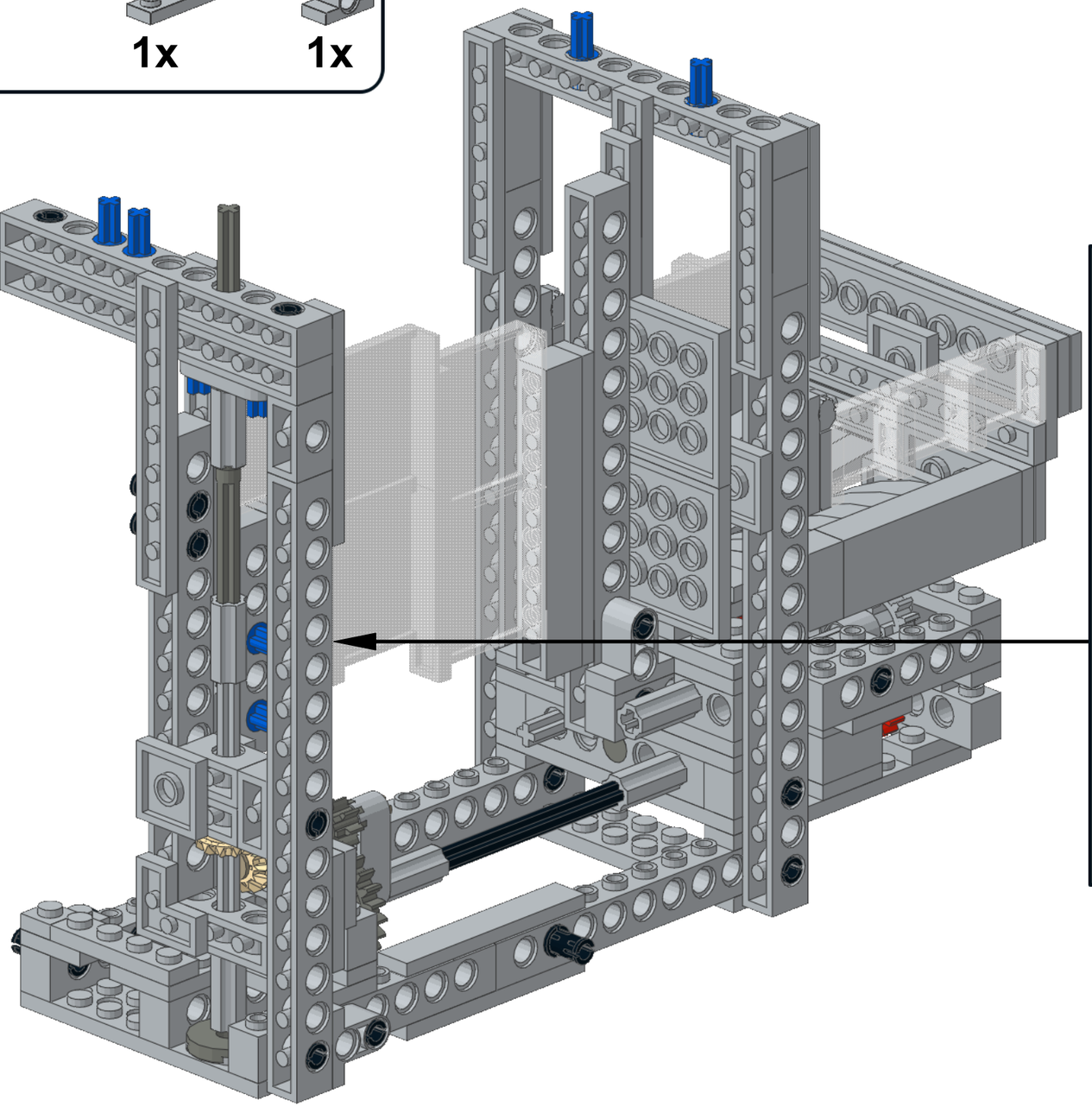

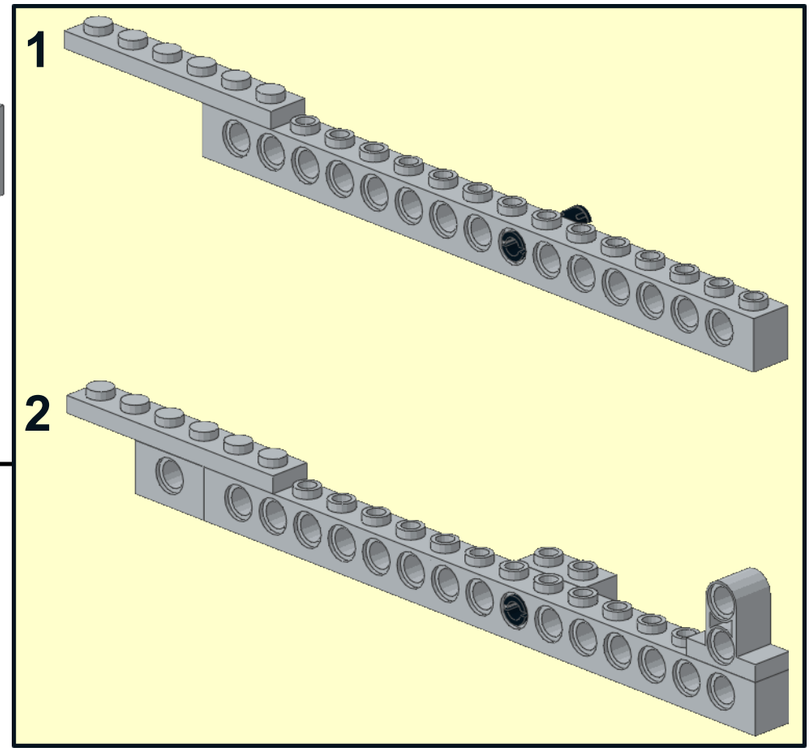

33

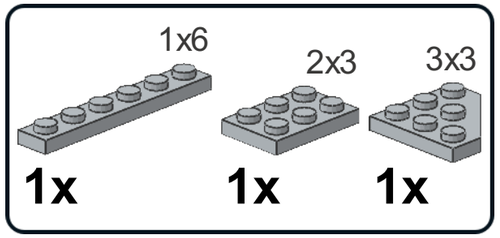

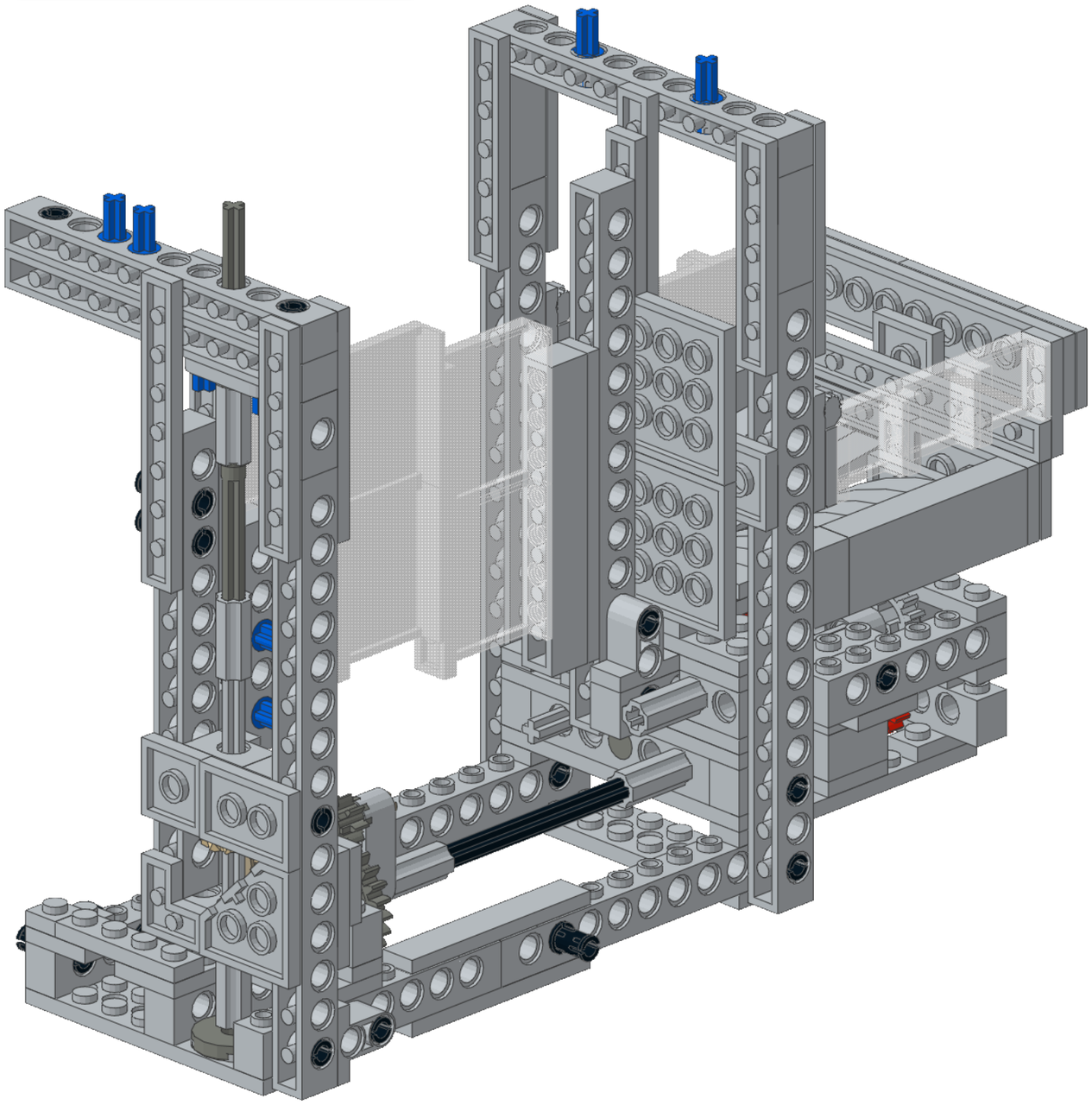

34

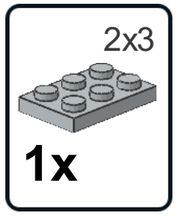

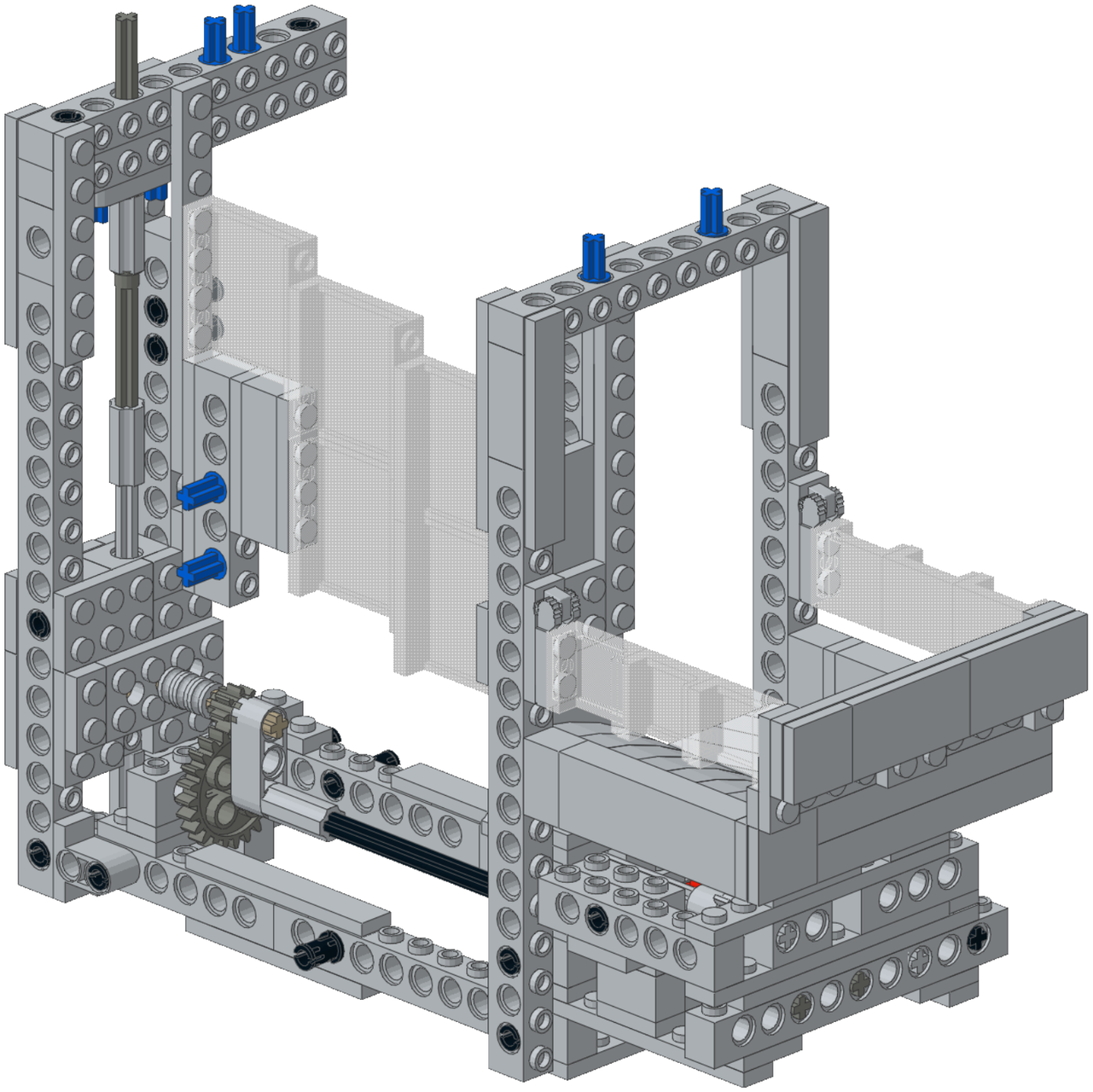

35

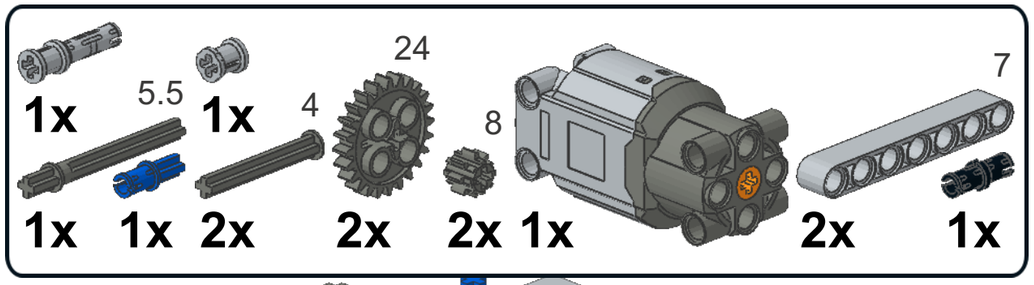

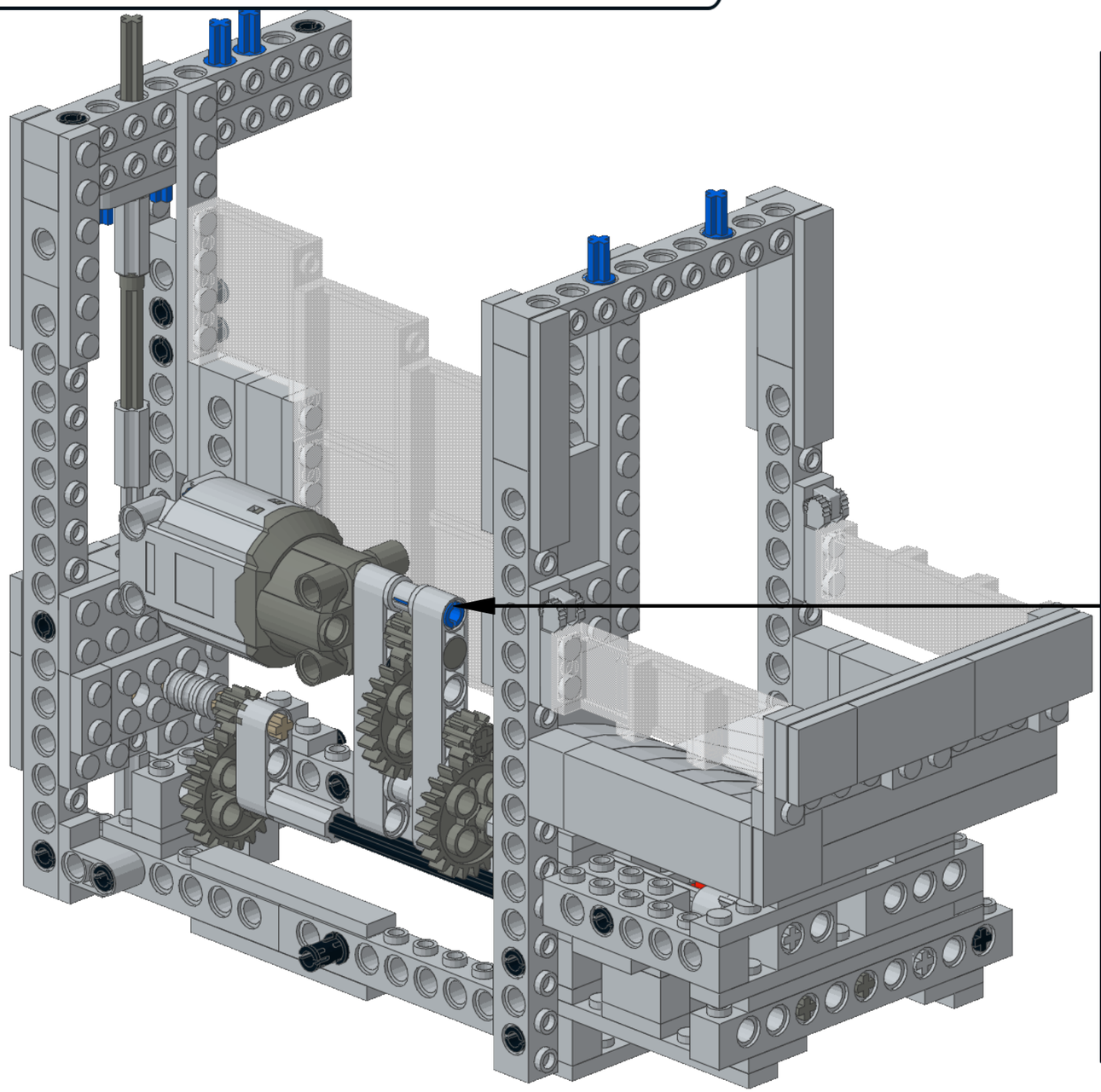

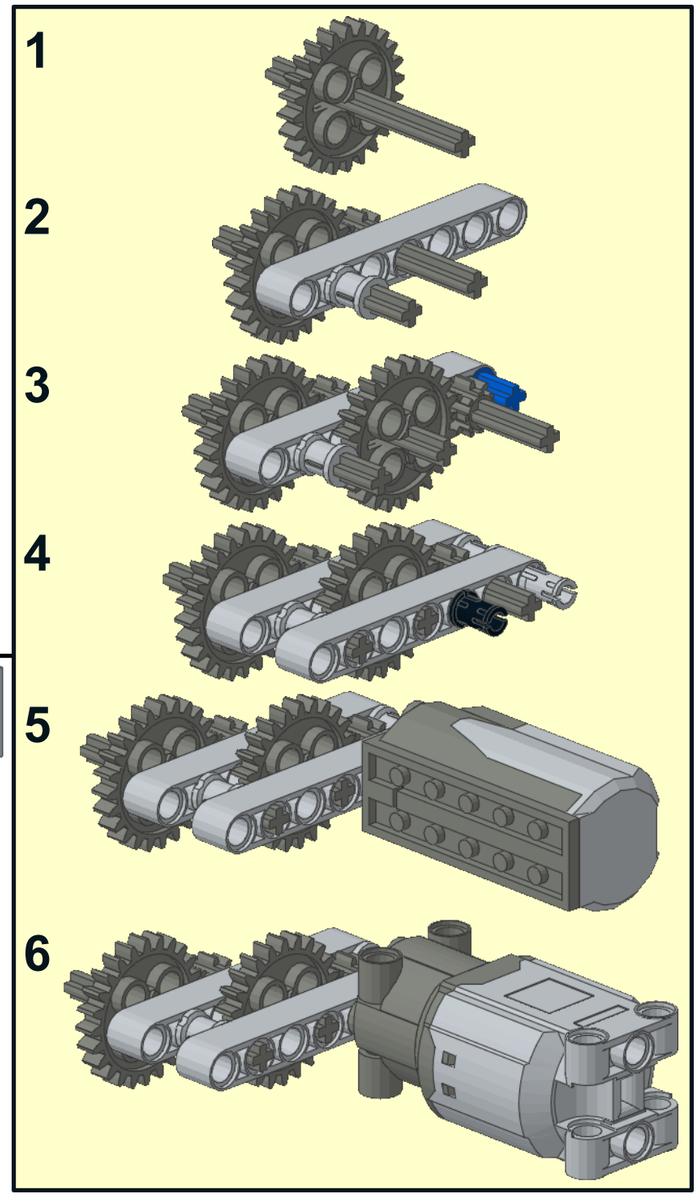

Copyright © 2016 by Maico Arts

36

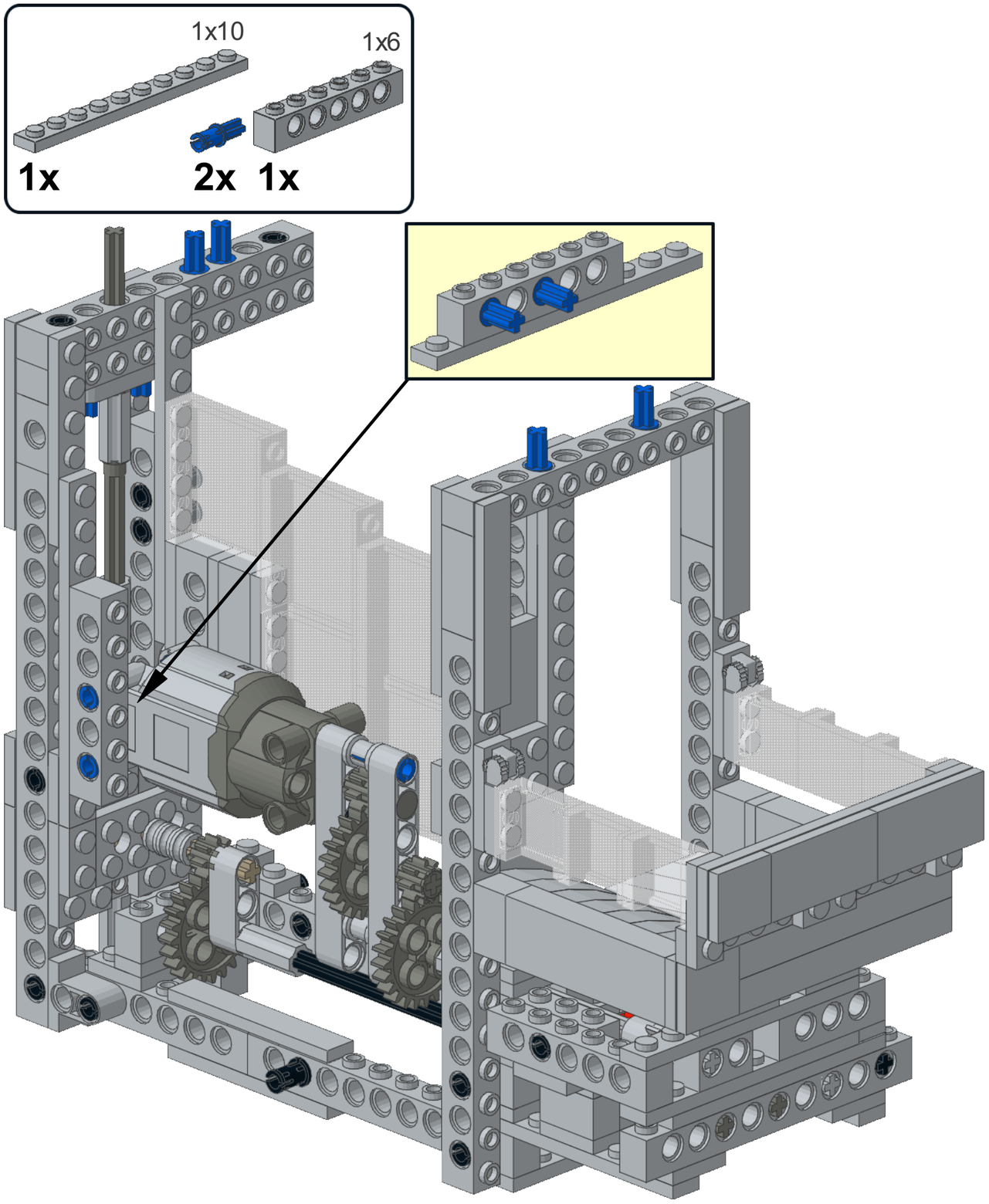

37

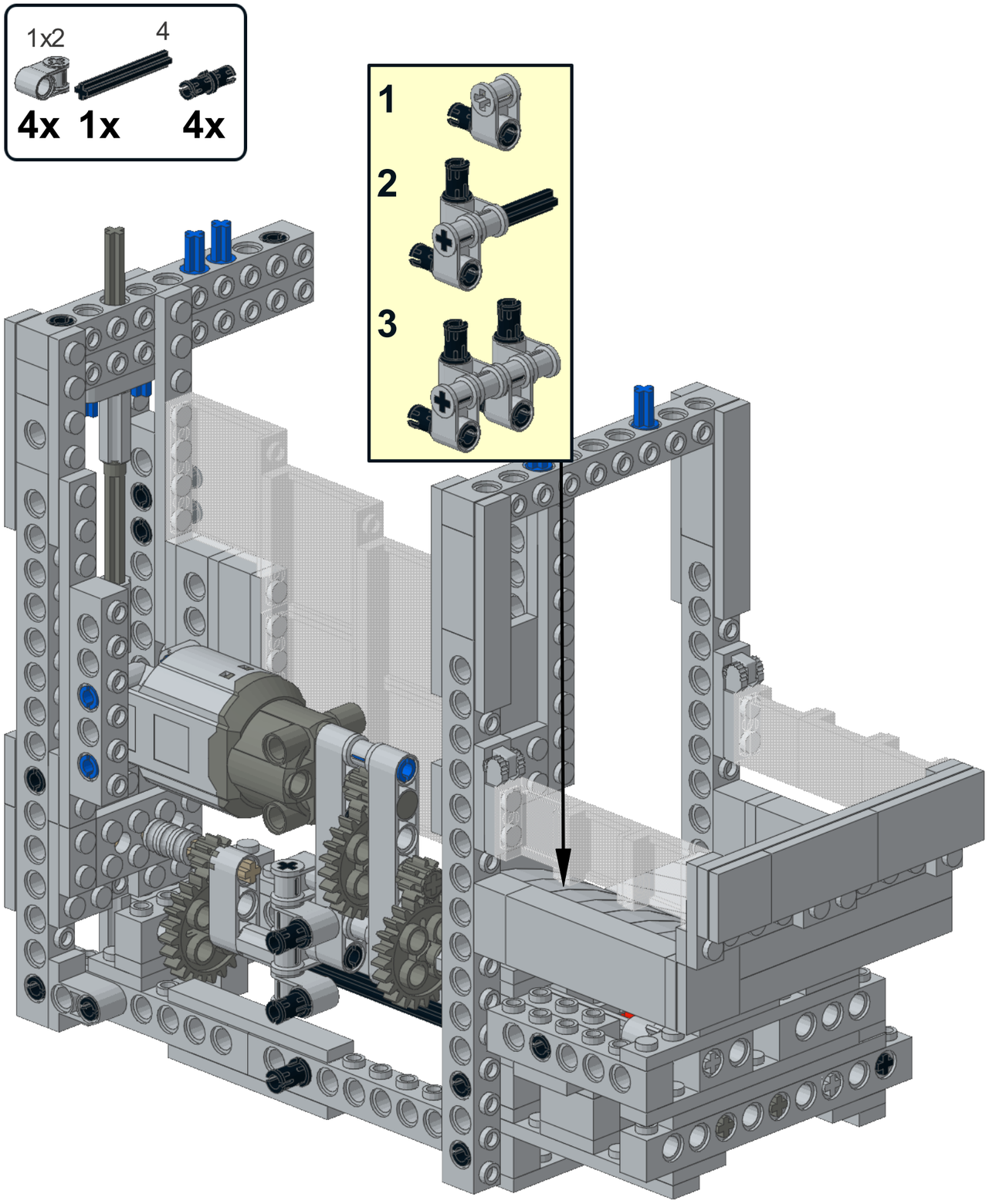

38

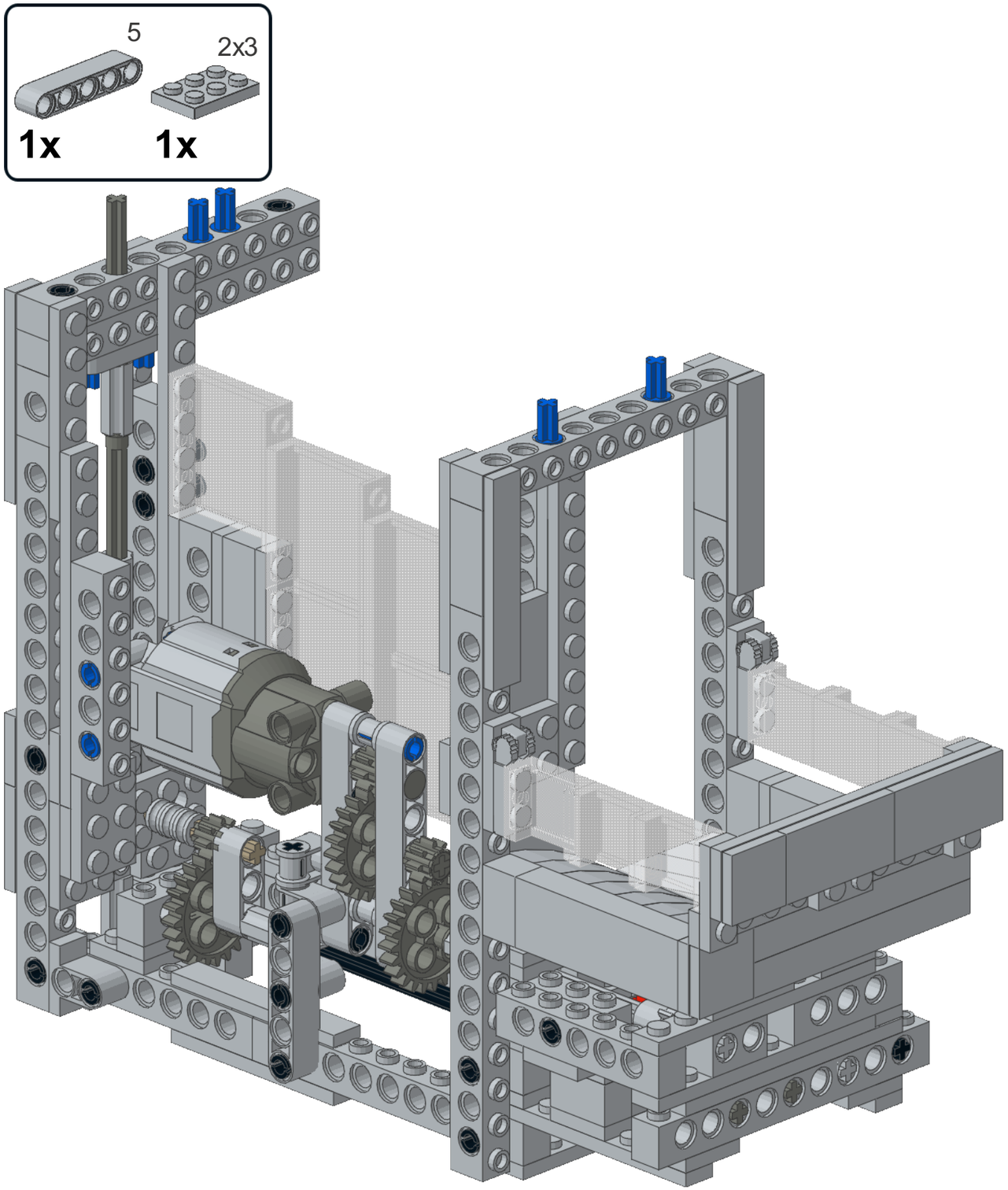

39

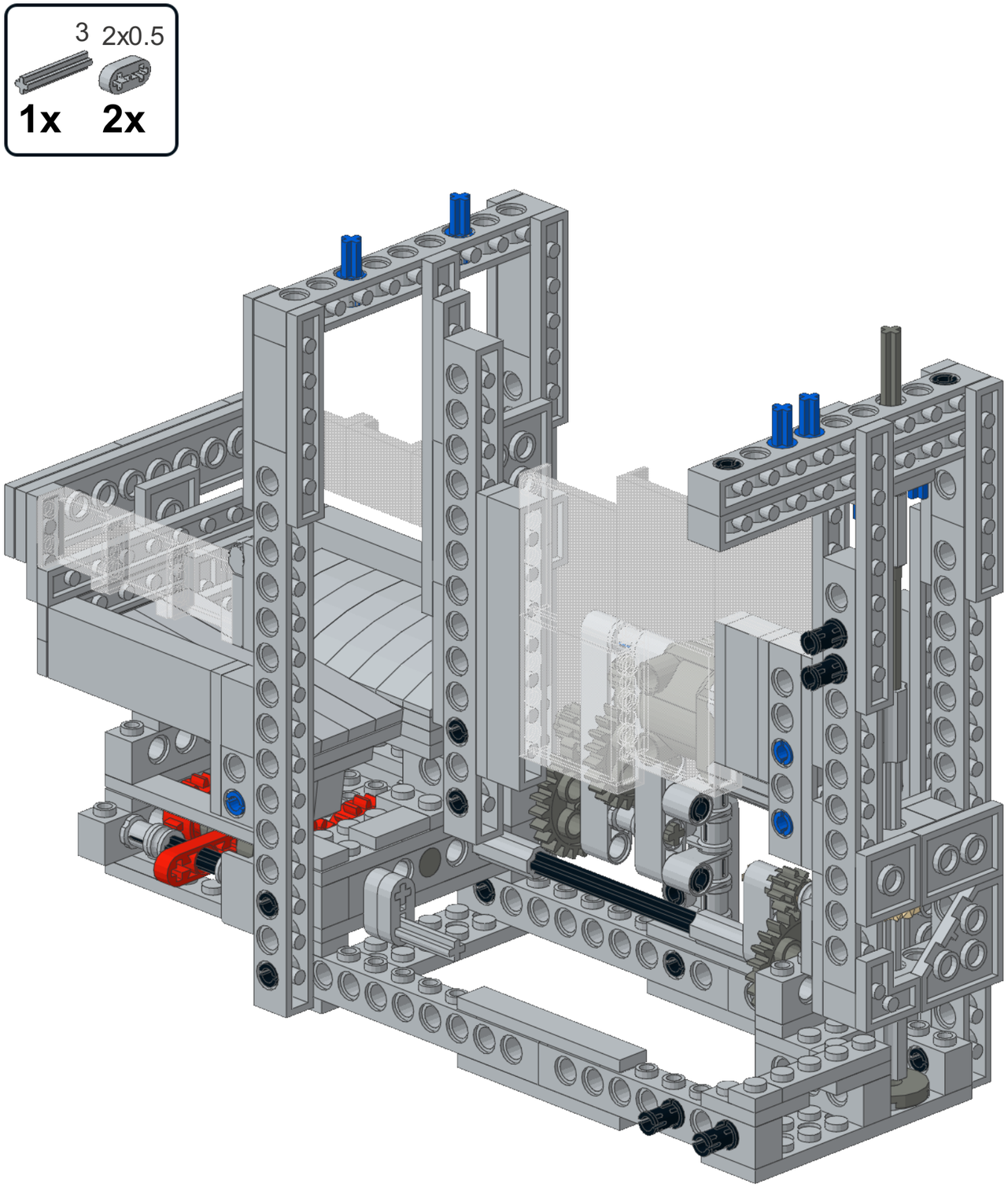

40

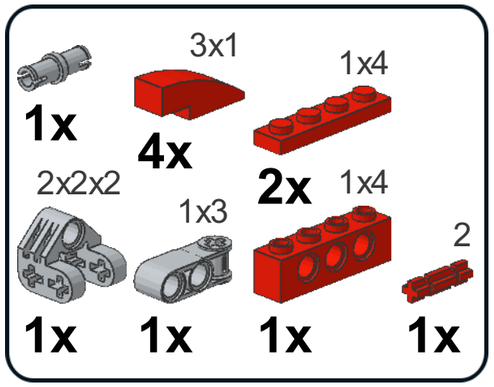

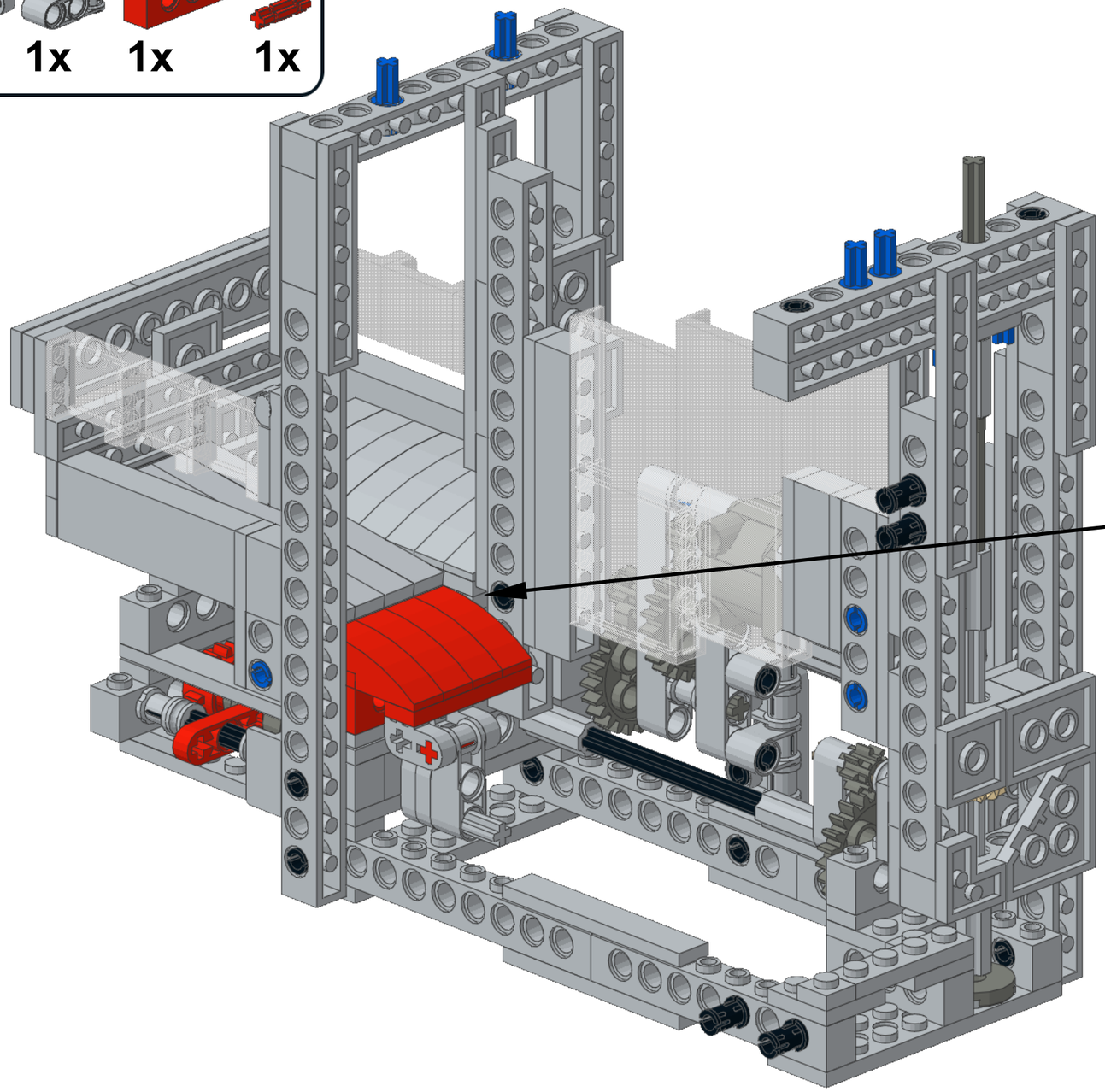

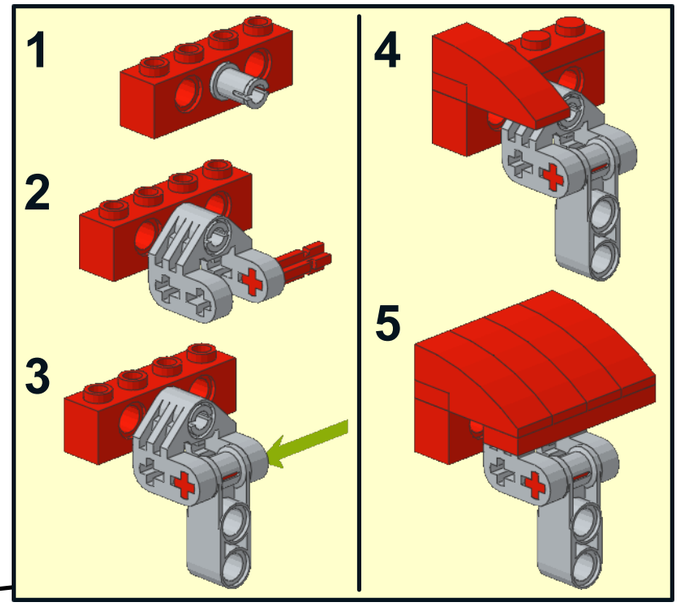

Copyright © 2016 by Maico Arts

41

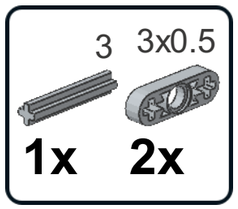

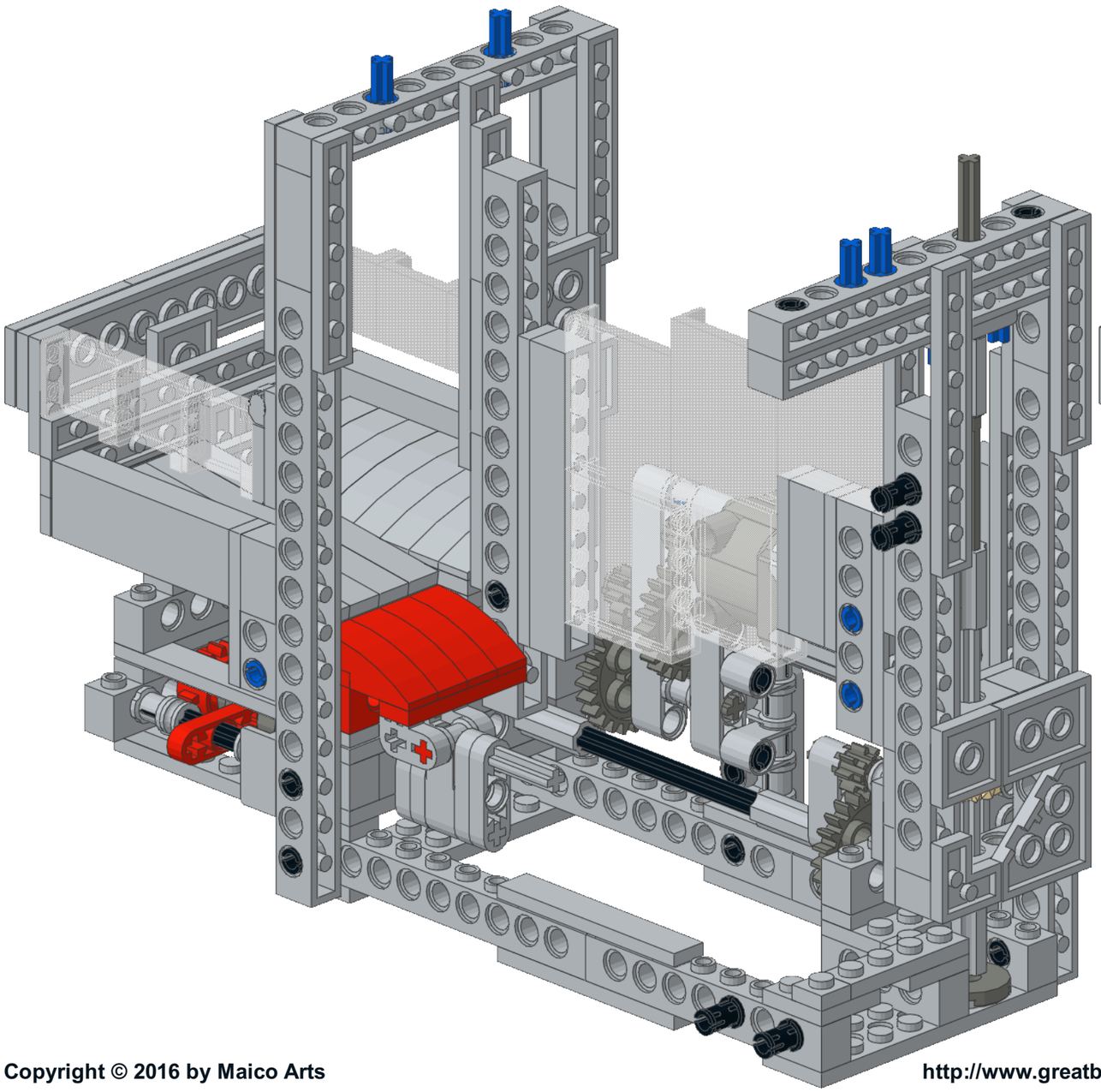

42

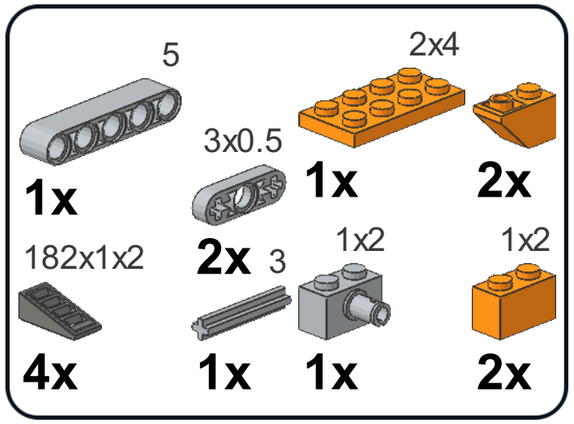

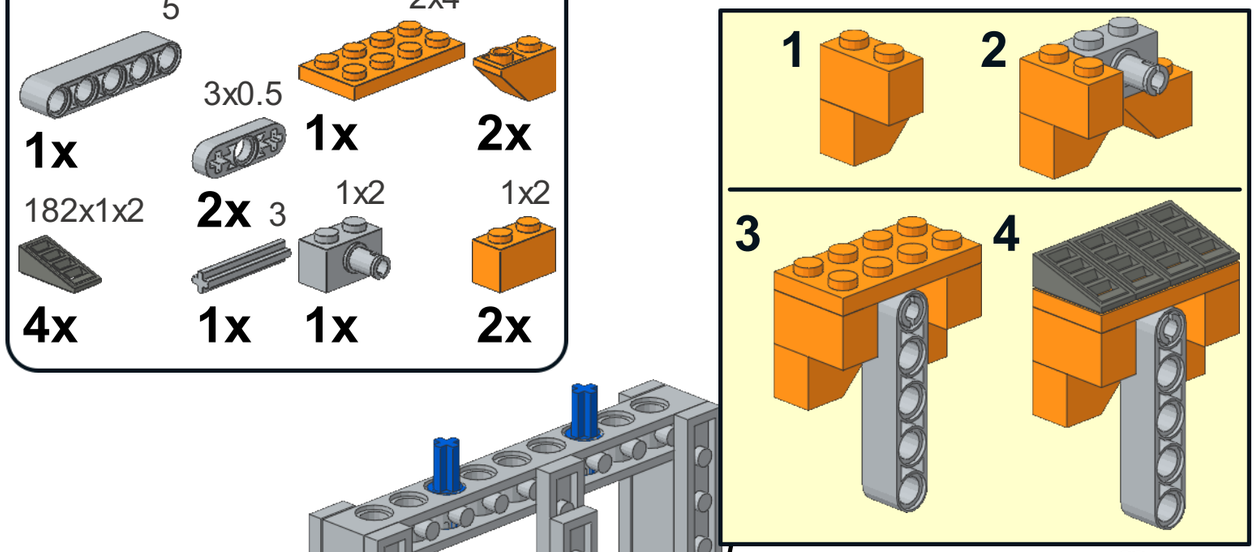

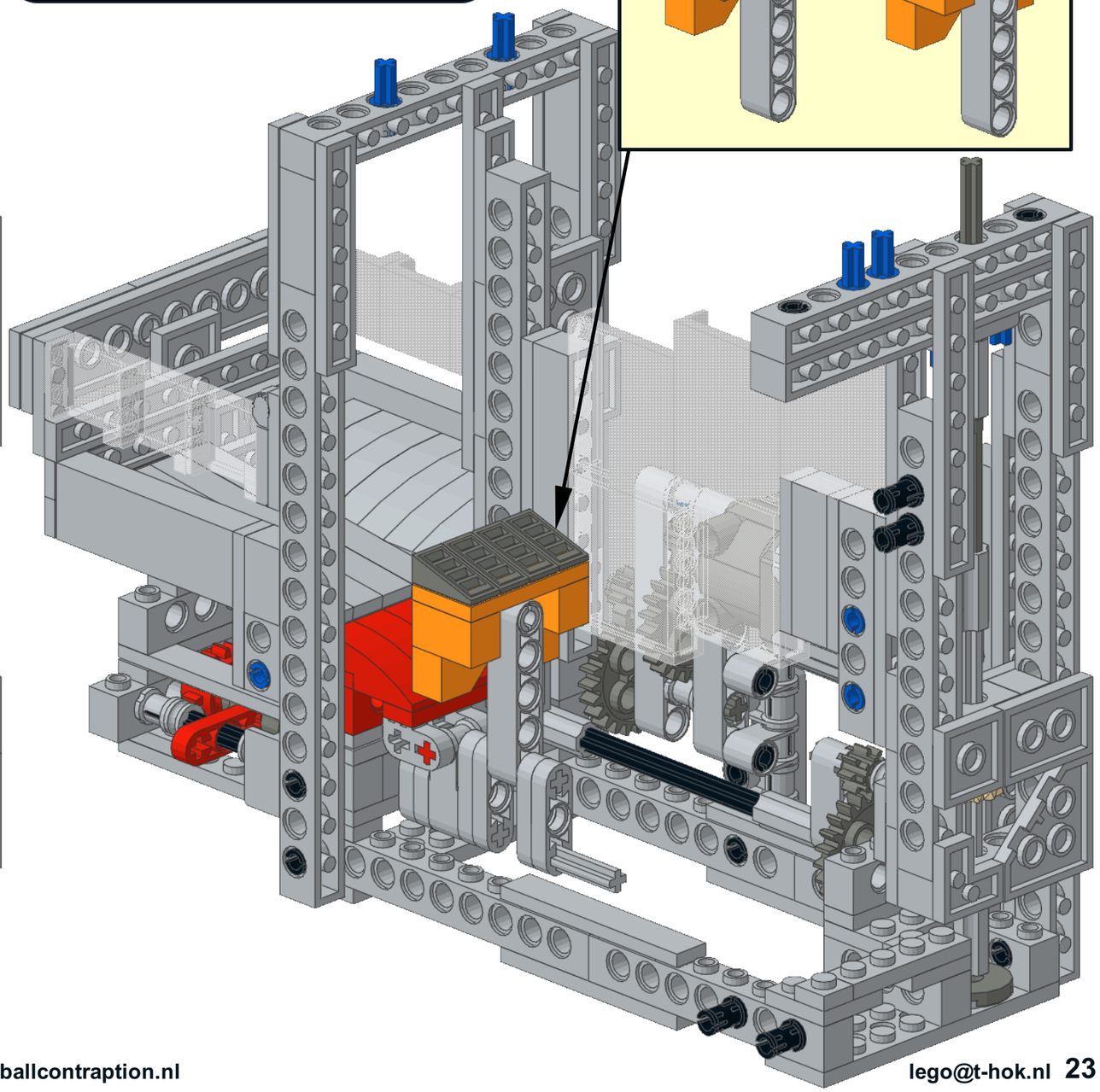

Copyright © 2016 by Maico Arts

43

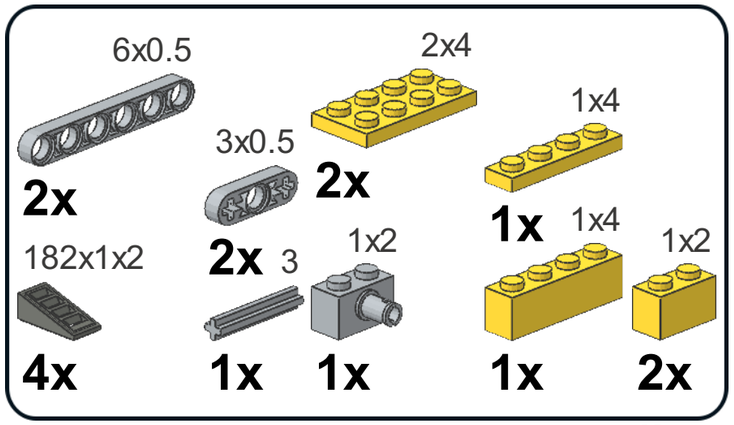
6x0.5
2x
2x4
2x
3x0.5
2x
1x4
1x
182x1x2
4x
2x 3
1x
1x2
1x
1x4
1x
1x2
2x

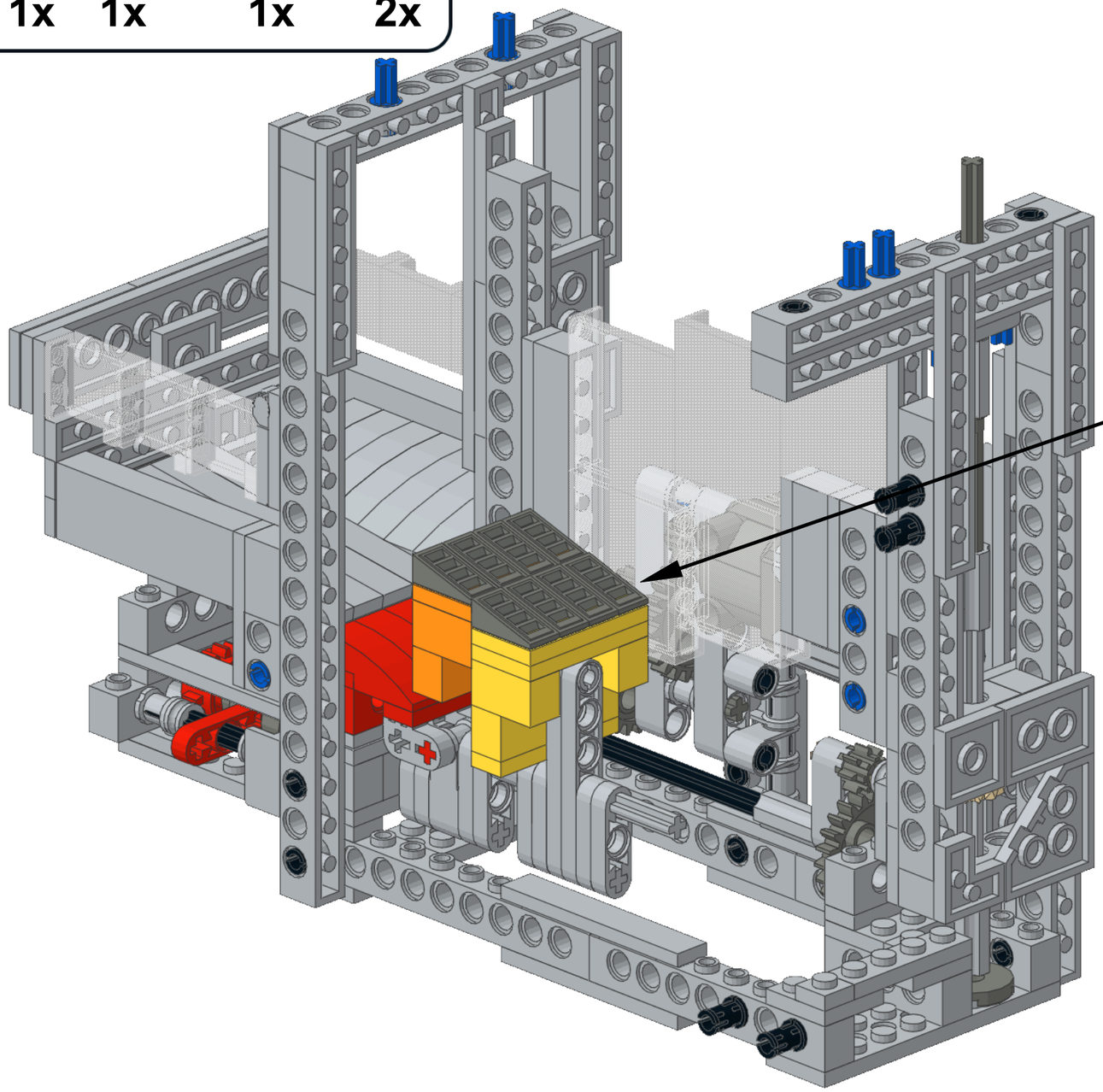

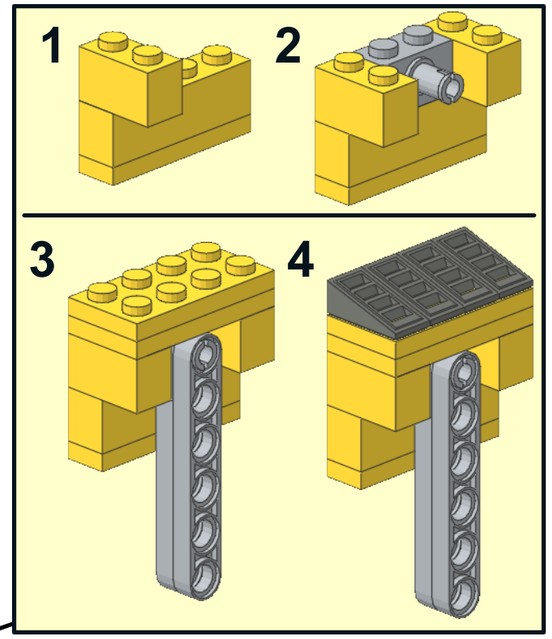
1
2
3
4

44

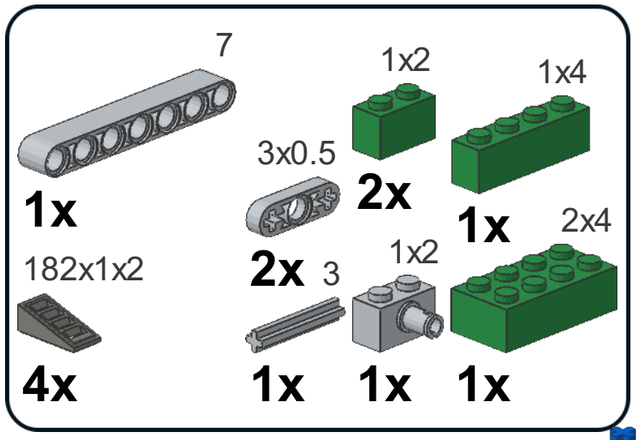

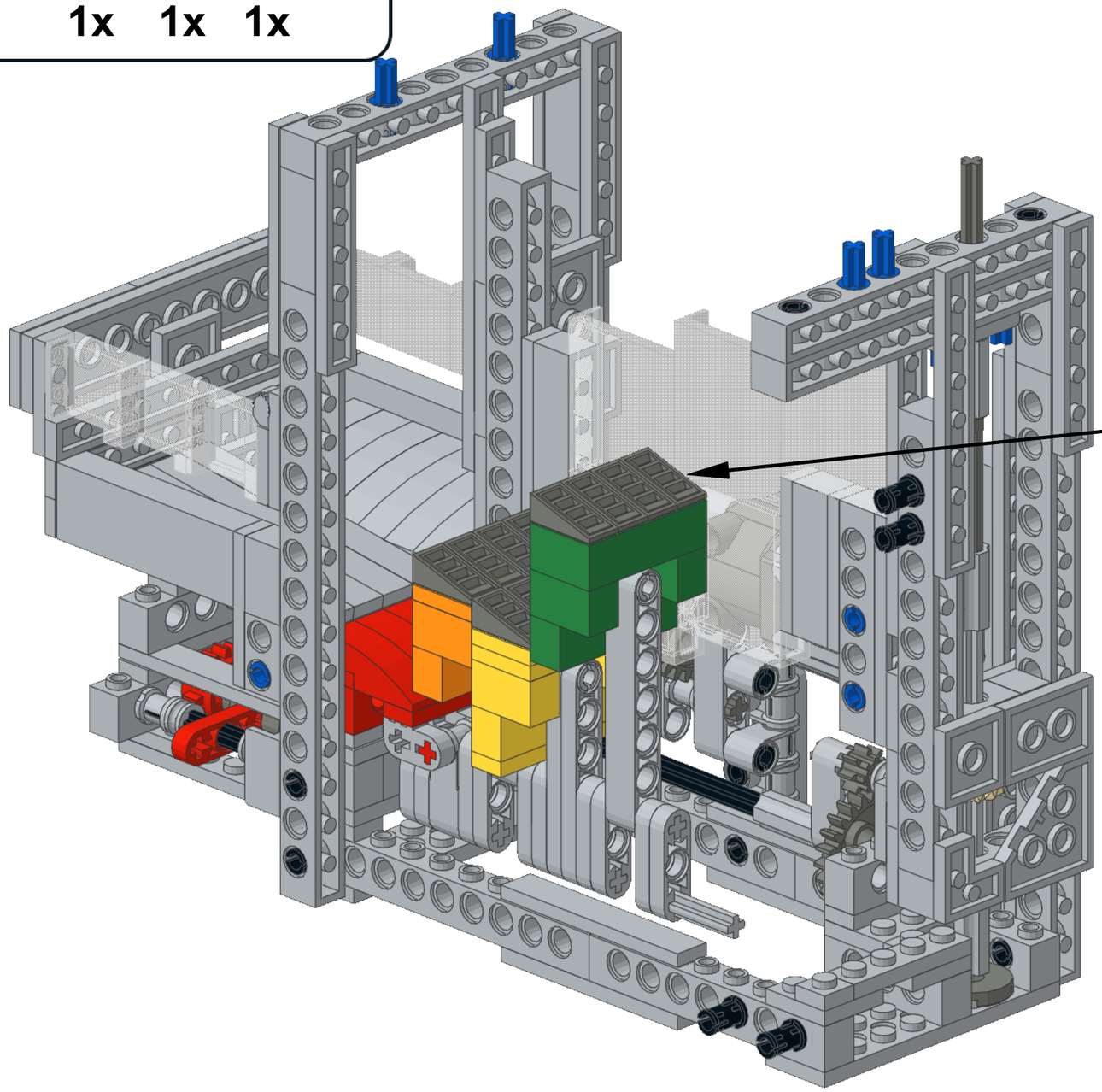

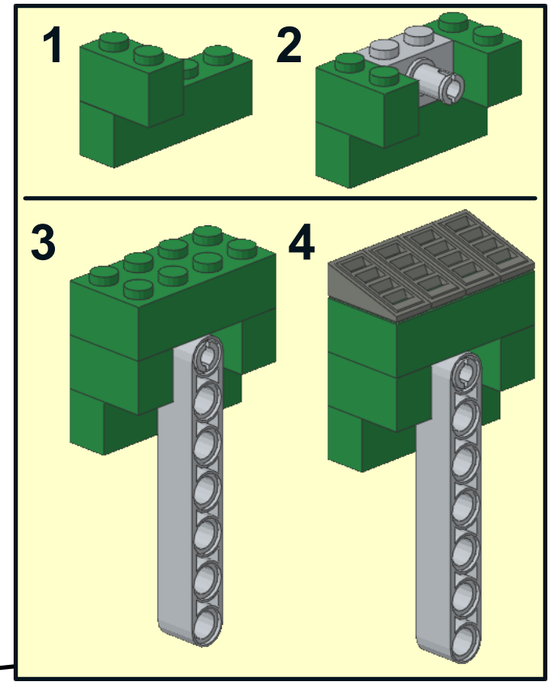

Copyright © 2016 by Maico Arts

45

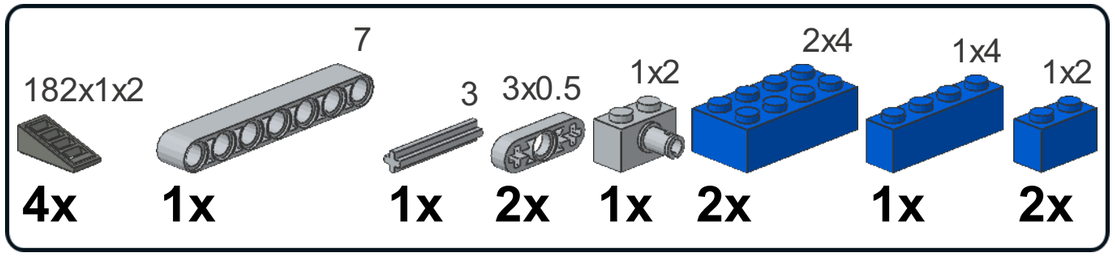

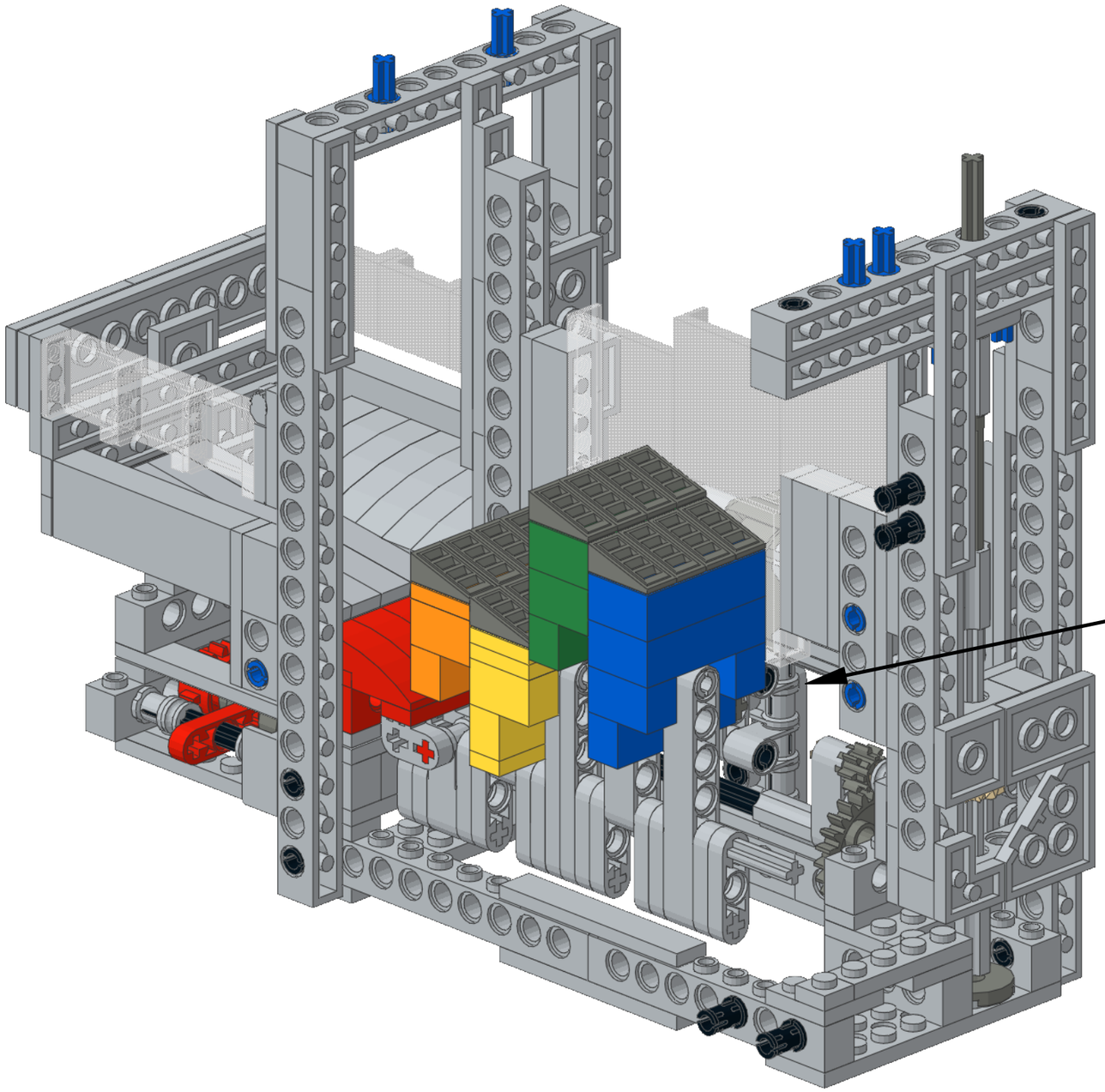

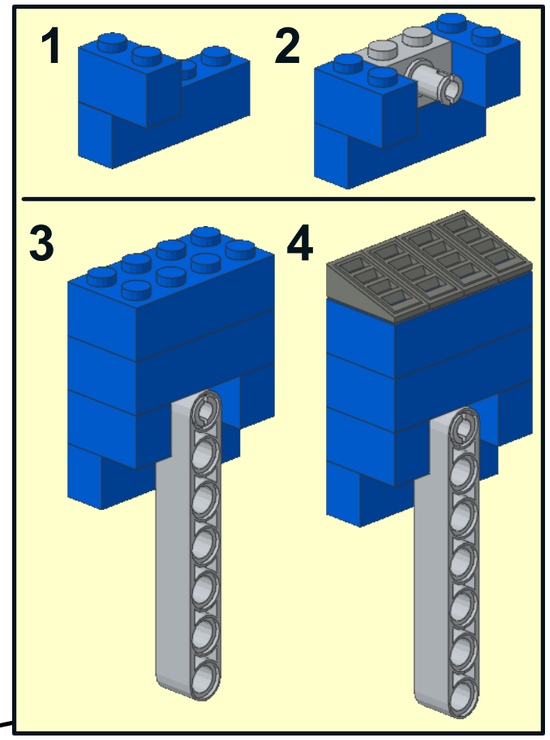

Copyright © 2016 by Maico Arts

46

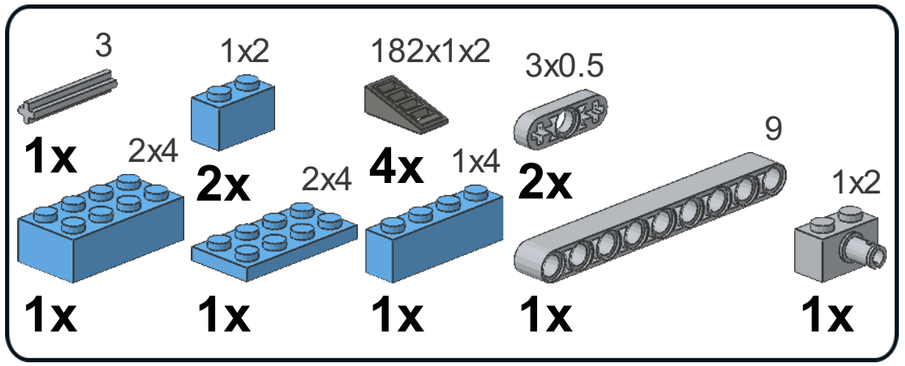
3
1x
1x2
2x
182x1x2
4x
3x0.5
2x
2x4
1x
2x4
1x
1x4
1x
9
1x
1x2
1x

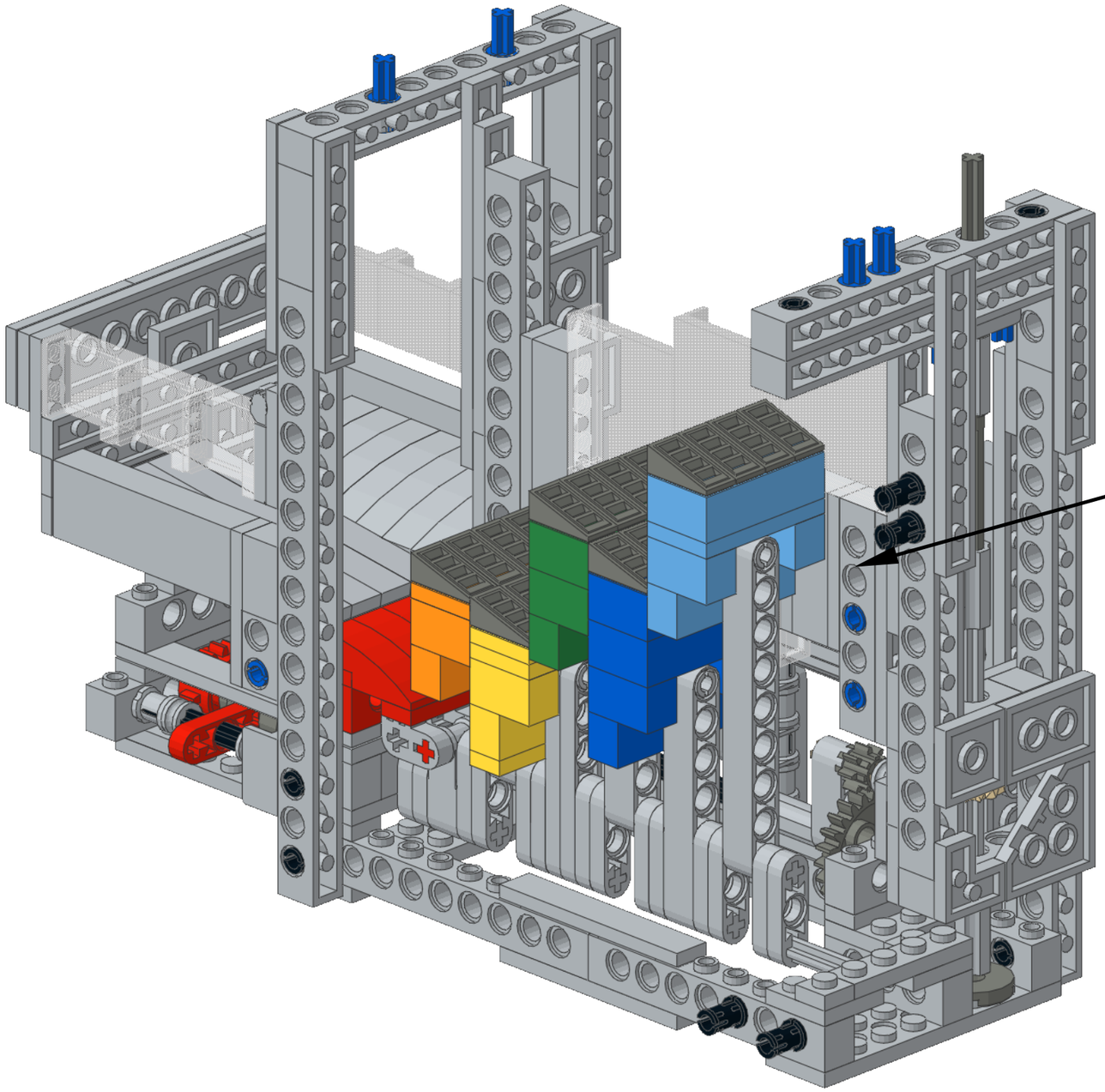

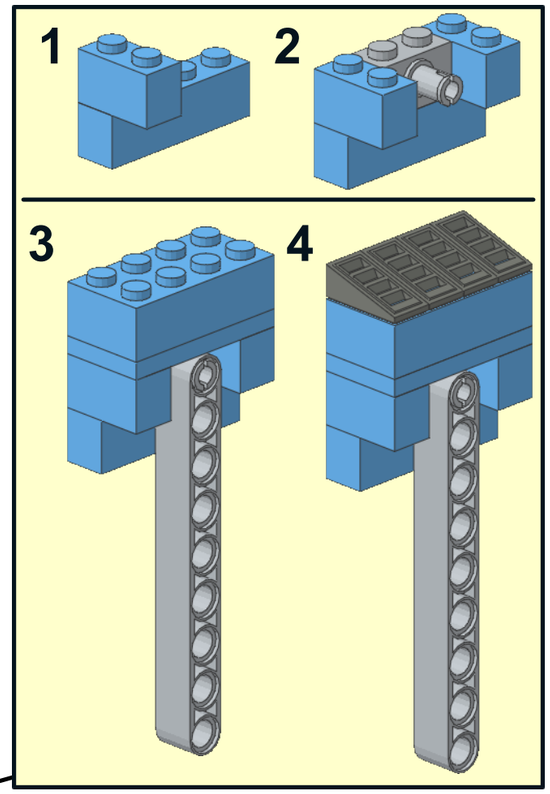
1
2
3
4

47

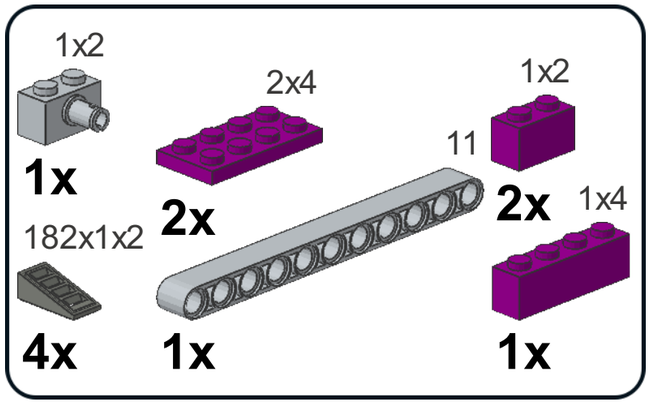

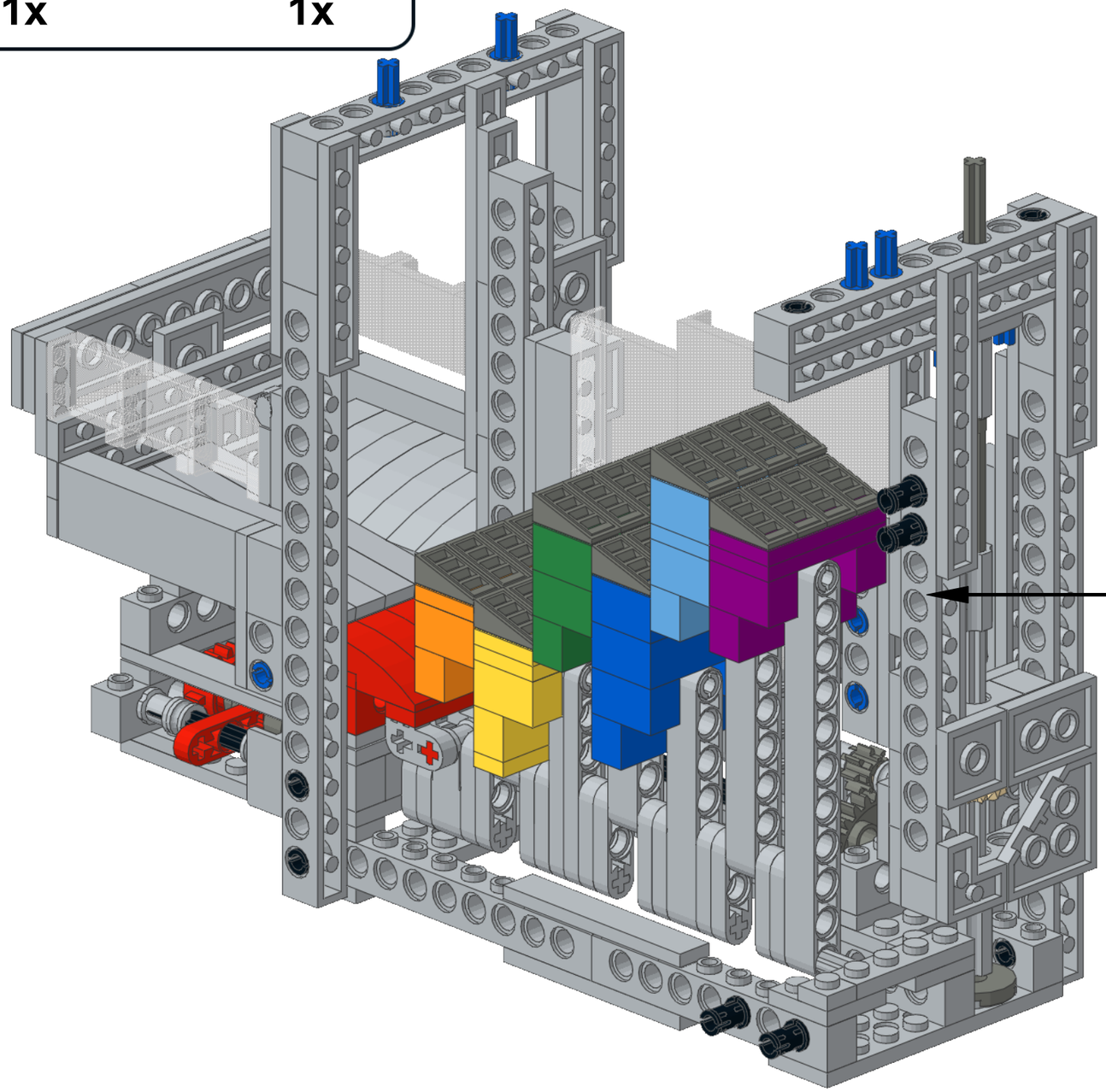

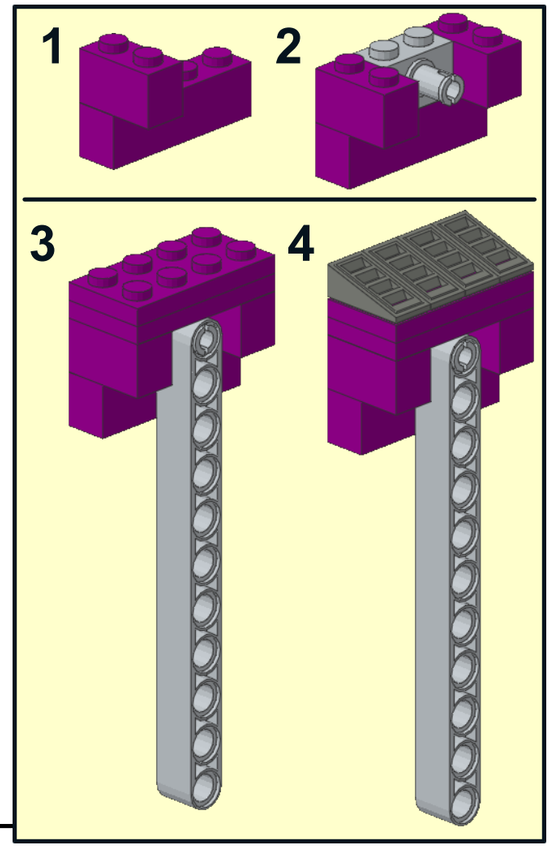

Copyright © 2016 by Maico Arts

48

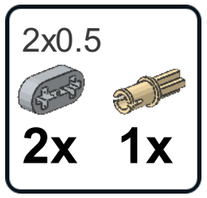

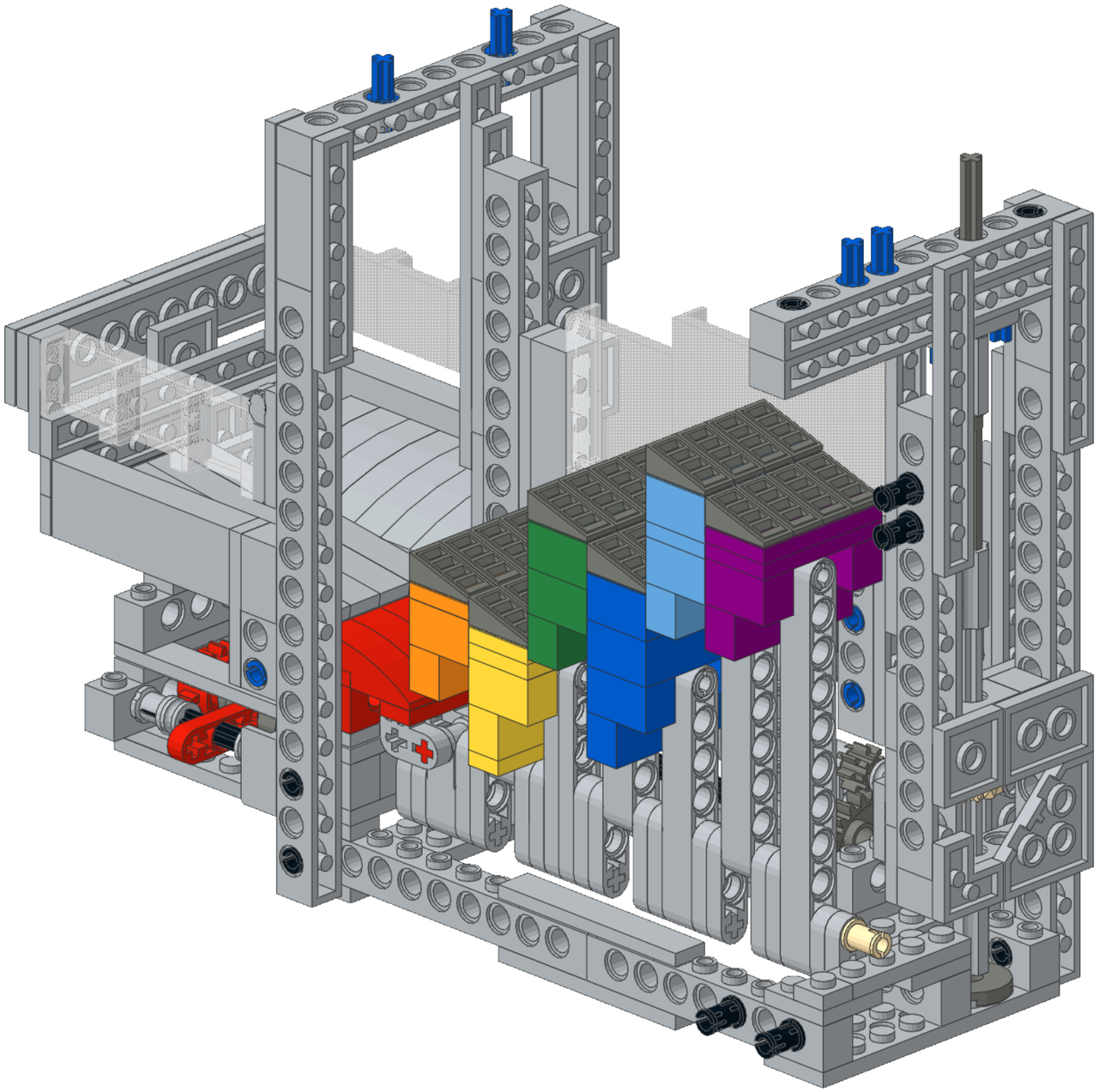

49

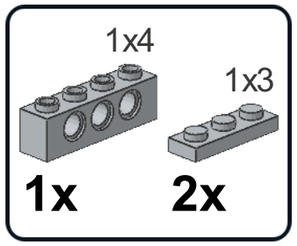

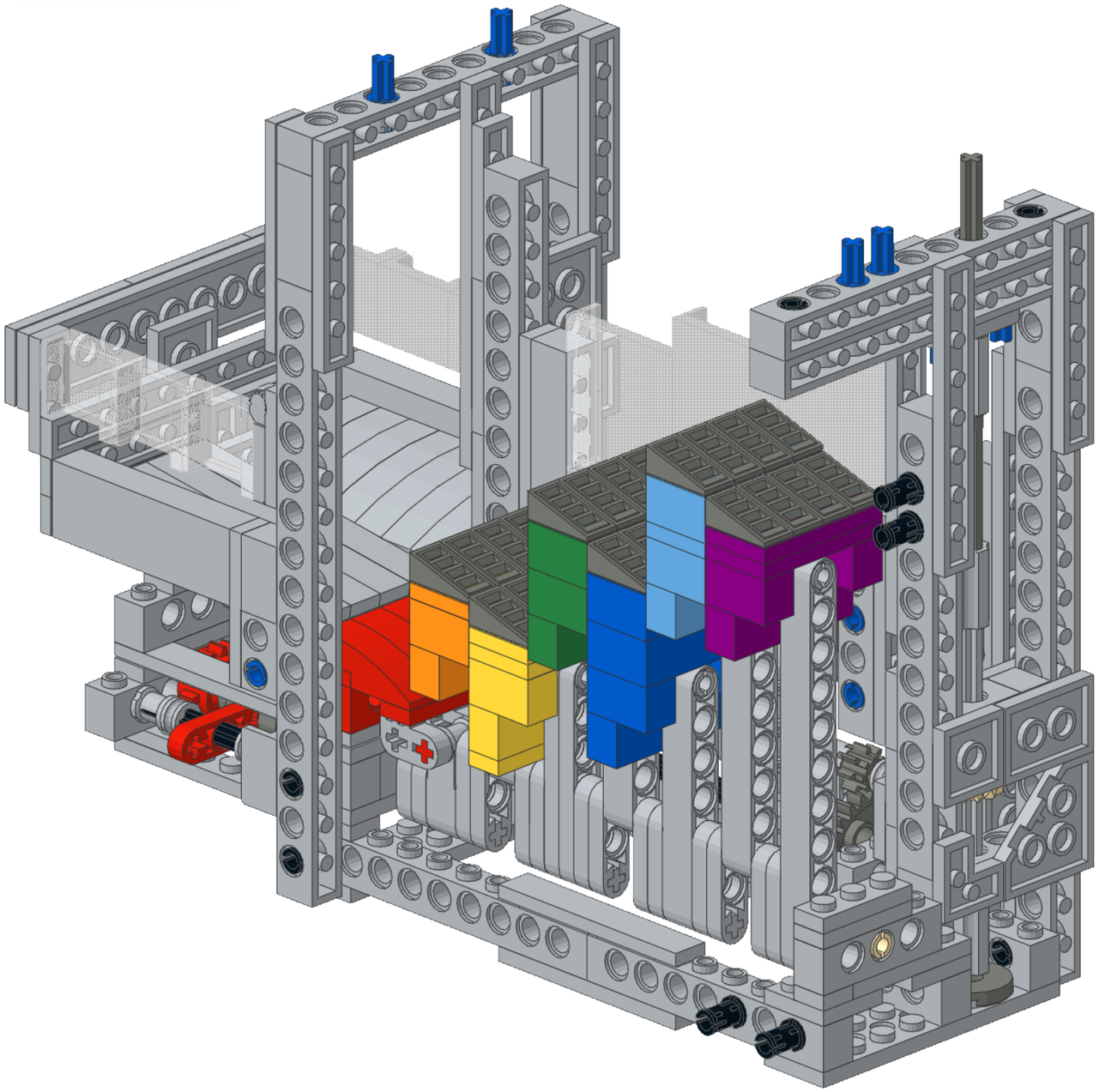

Copyright © 2016 by Maico Arts

50

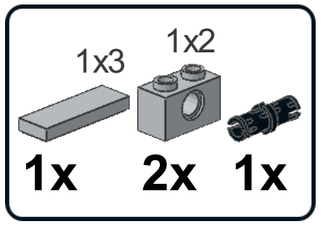

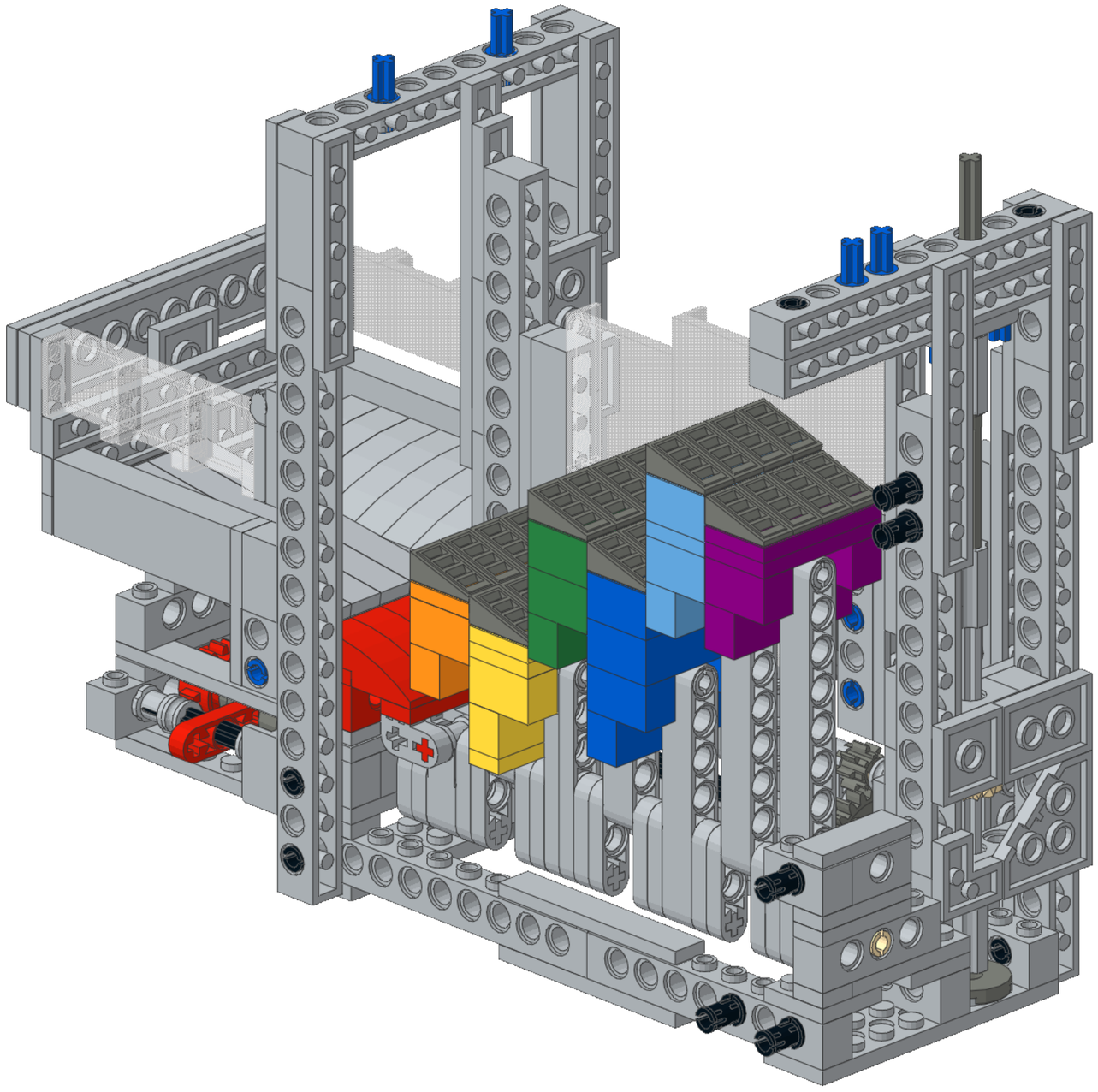

51

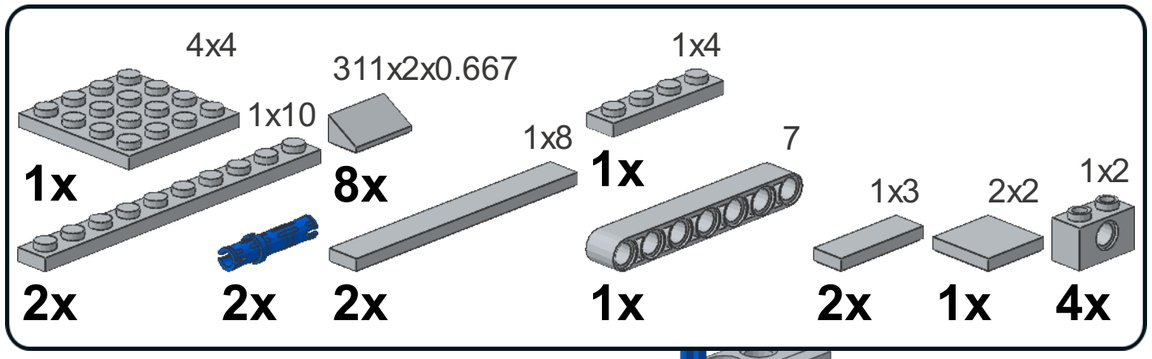
4x4
1x
1x10
2x
311x2x0.667
8x
2x
1x8
2x
1x4
1x
7
1x
1x3
2x
2x2
1x
1x2
4x

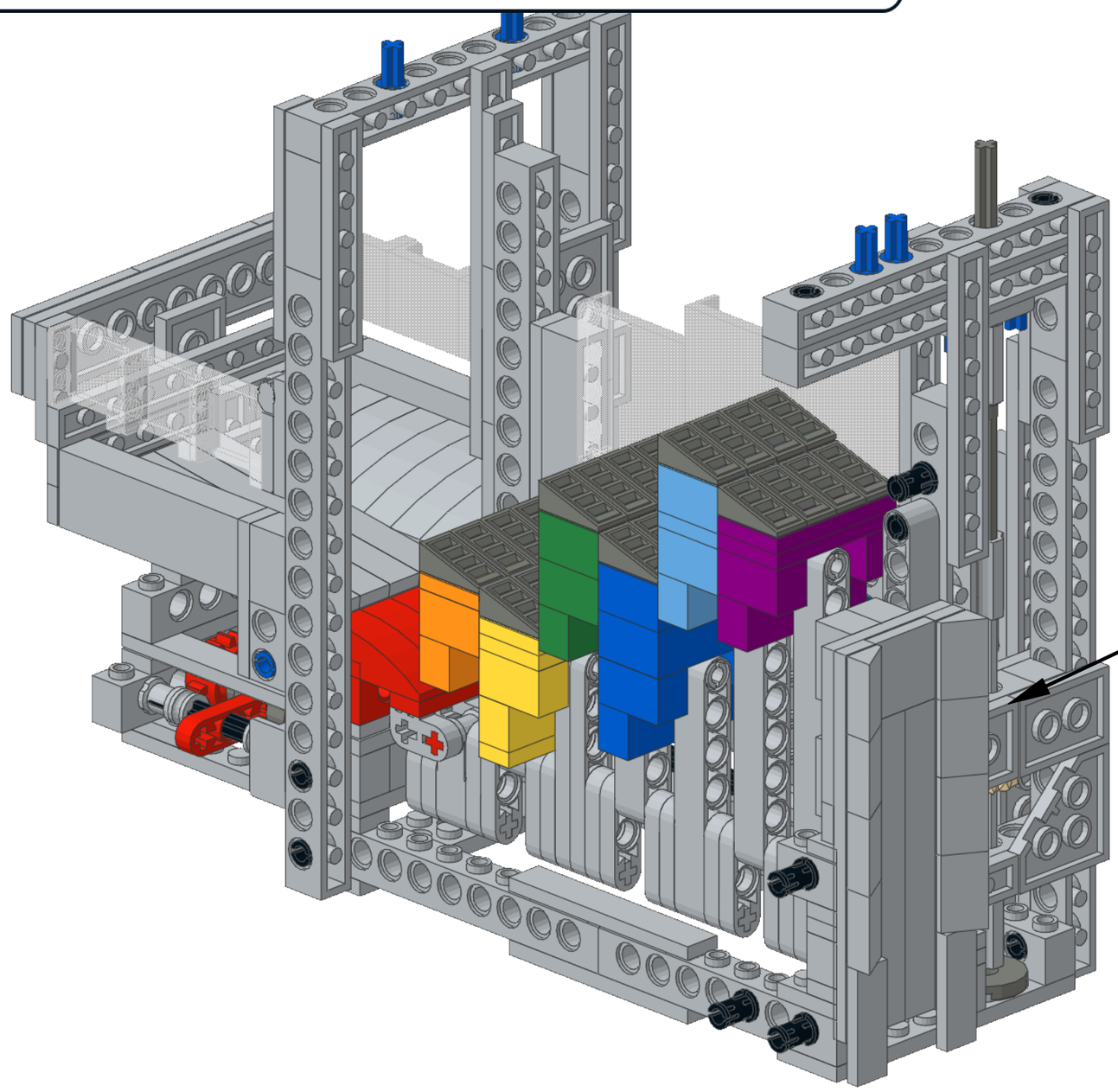

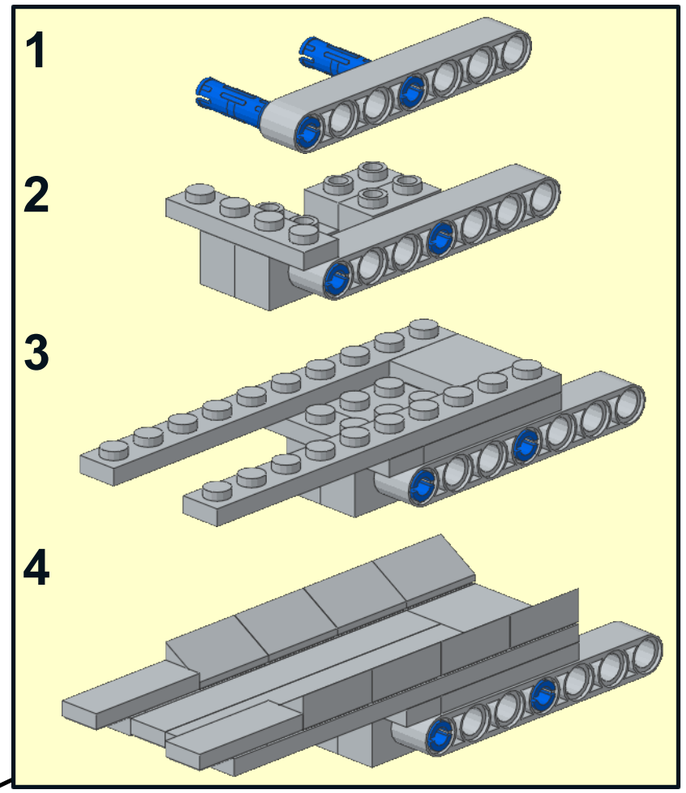
1
2
3
4

52

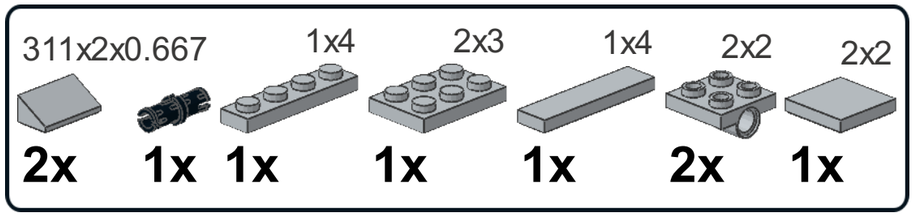

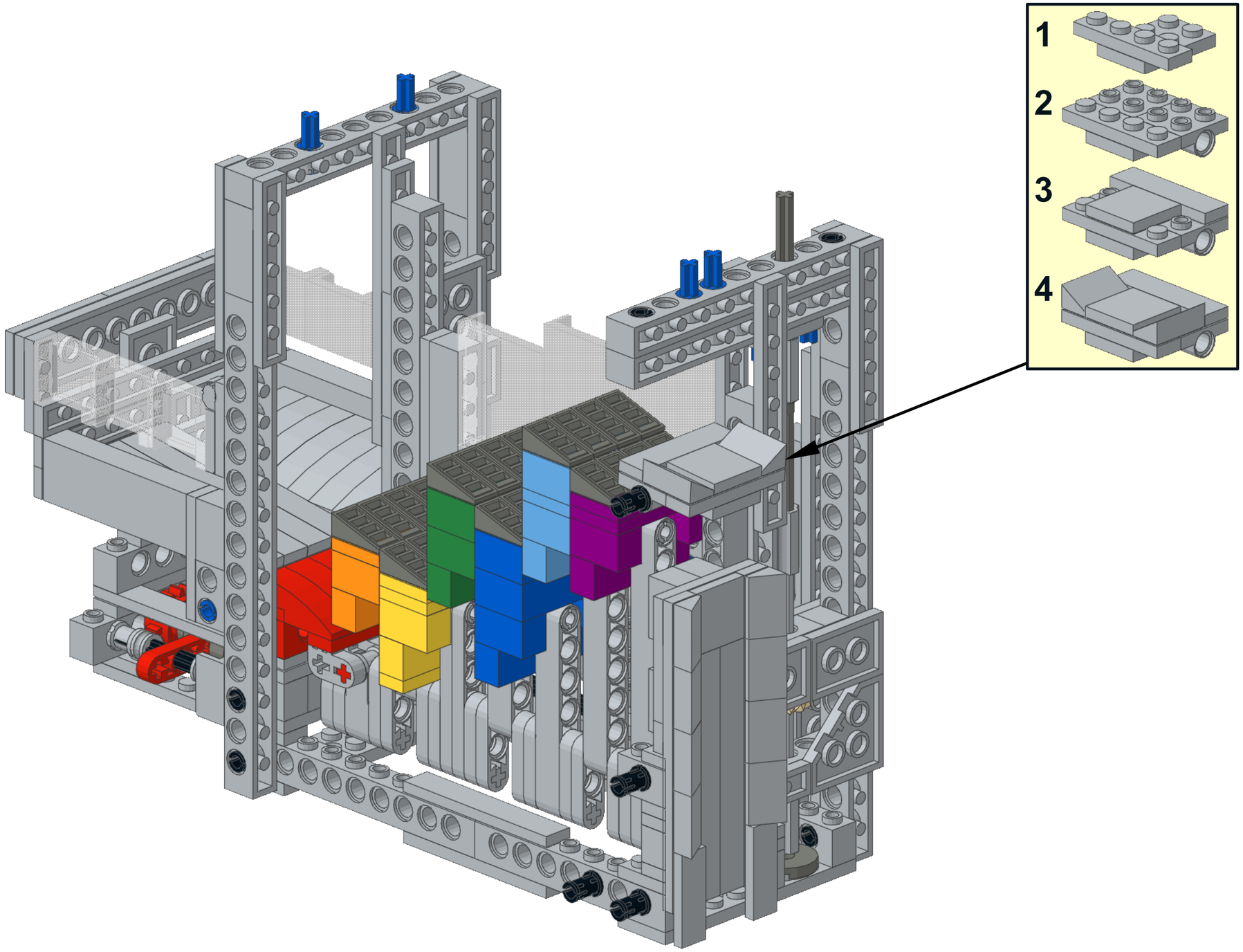

53

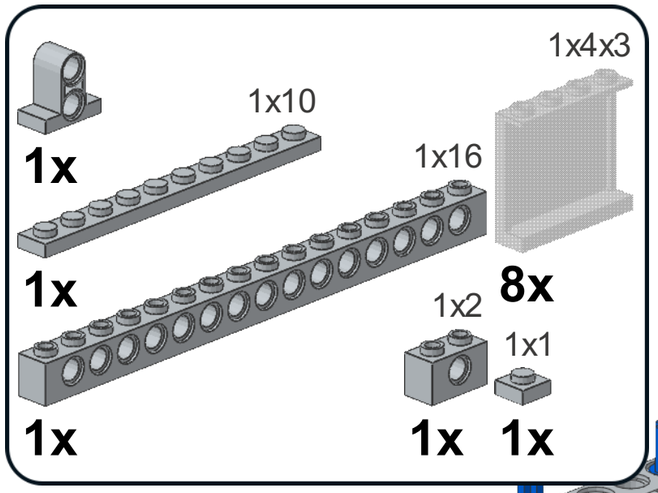

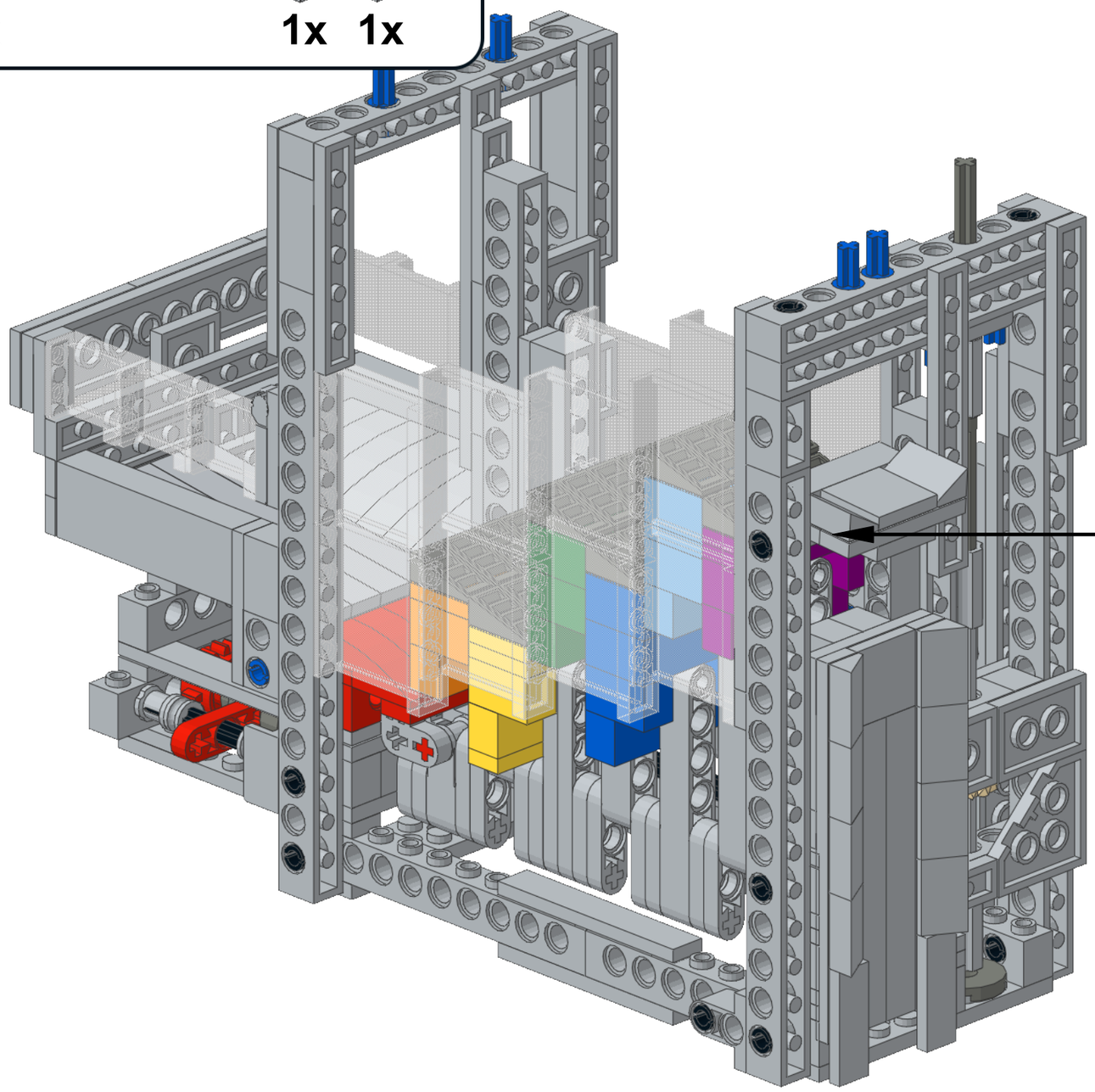

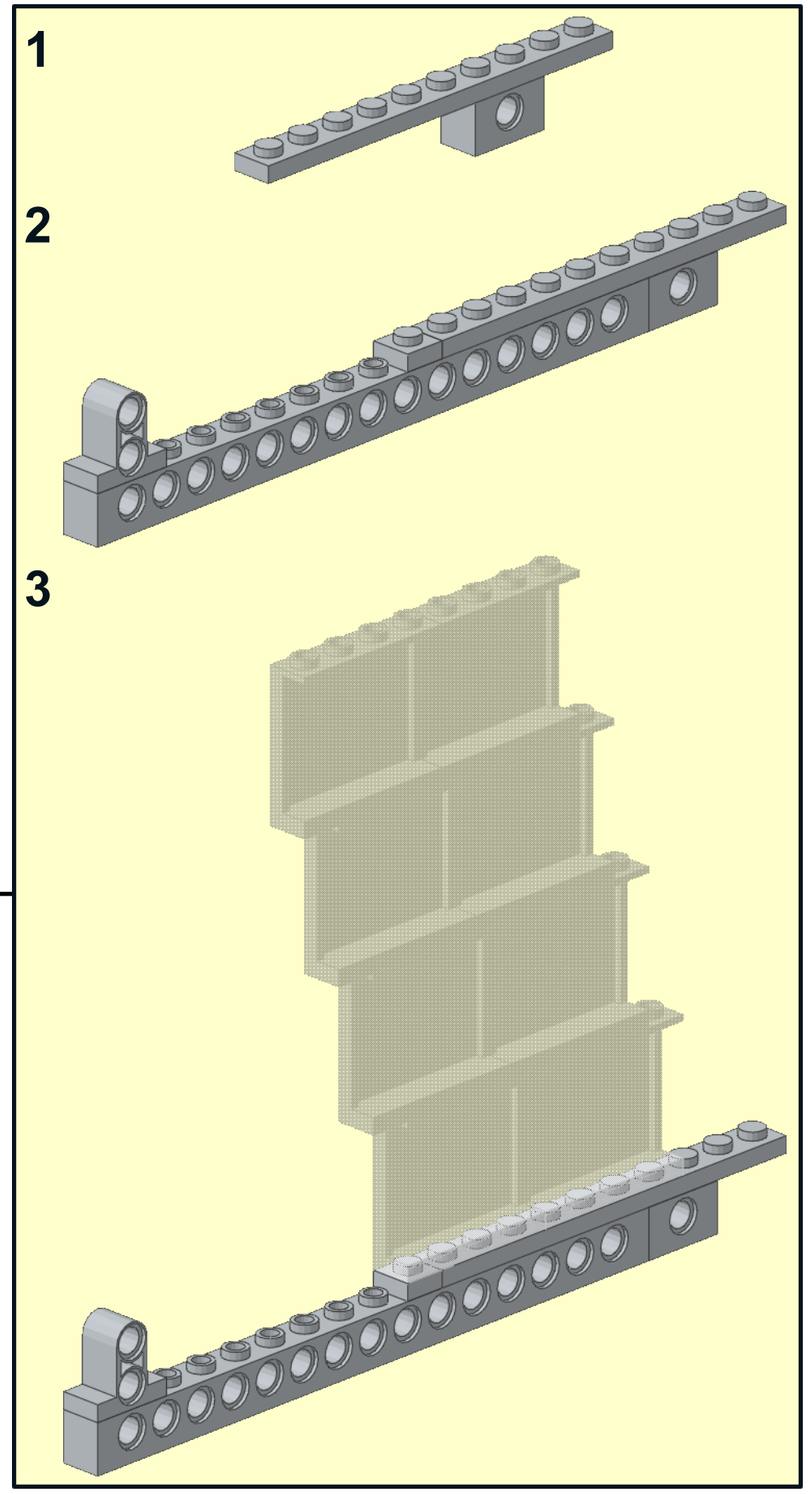

Copyright © 2016 by Maico Arts

54

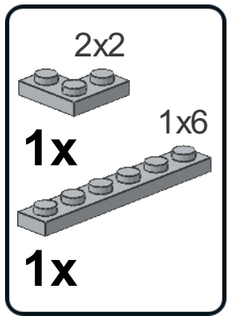

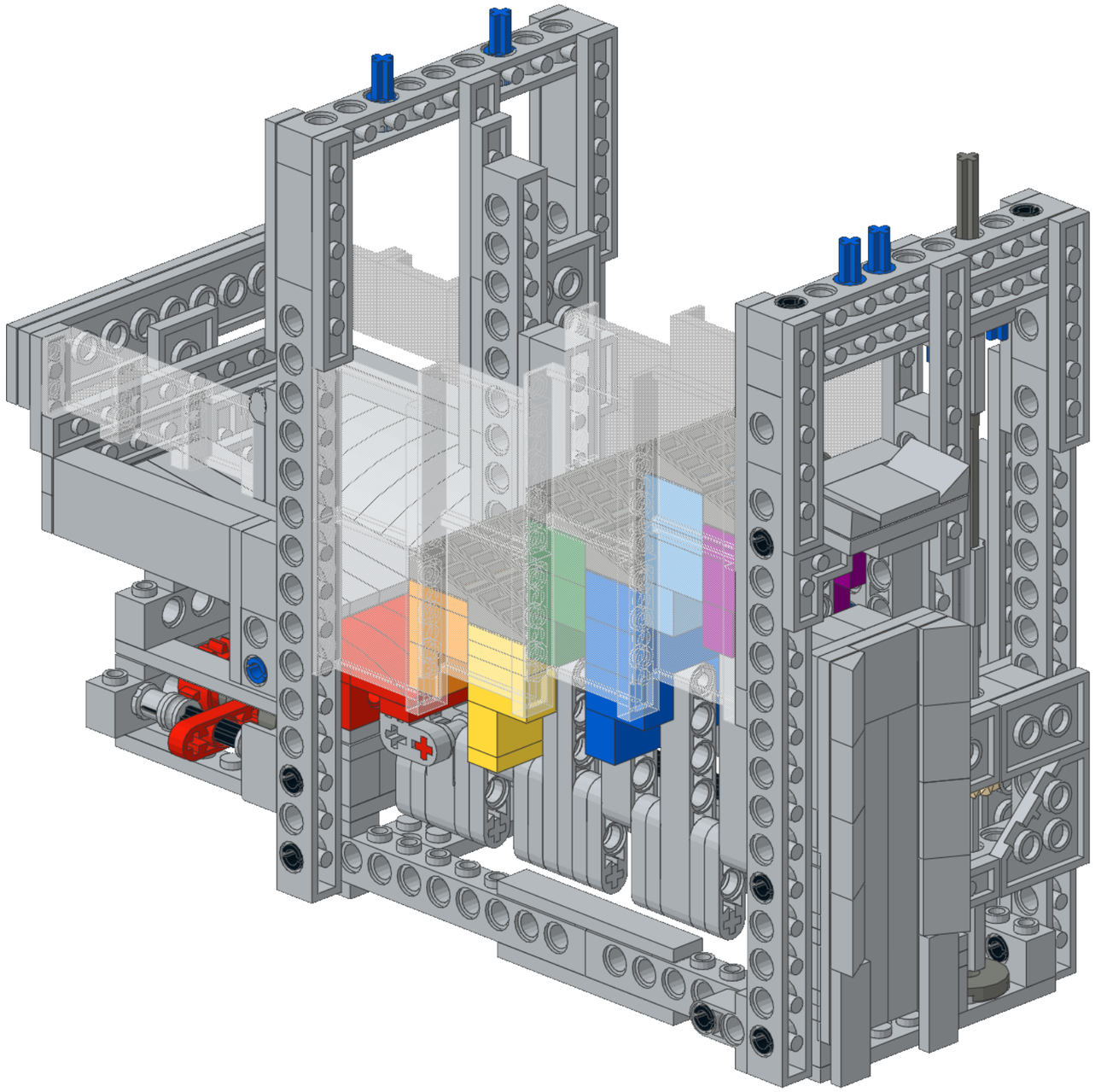

regenboog-v3.1

Model instructions by Maico Arts

Copyright © 2016

http://www.greatballcontraption.nl

lego@t-hok.nl

LEGO® is a registered trademark of the LEGO Group, which does not sponsor, endorse, or authorize these instructions or the model they depict.

Instructions configured and generated using LPub3D 2.0.8.785.2
Download LPub3D at http://sourceforge.net/projects/lpub3d/